RV College of Engineering®

ELEMENTS OF MECHANICAL ENGINEERING
UNIT -2

Prepared by
Keshavamurthy YC

Go, change the world®

RV College of Engineering®

Contents

- **Manufacturing Systems:** Overview of manufacturing systems such as casting, forming & machining.
- **Metal Joining Processes:** Introduction to metal joining processes, Welding & Soldering and its differences, Principle of Arc Welding, Gas Welding and soldering. Materials for Welding and soldering. Safety devices.
- Emphasis on **modern** and emerging technologies: CNC machining. **Introduction to smart manufacturing**: automation & its types and features, IIoT. **Applications**: electronics, aerospace, biomedical, and sustainable manufacturing.

Overview of Manufacturing Processes

- Manufacturing = Conversion of raw materials into finished products with desired shape, size, and properties.
- It involves value addition → raw material → semi-finished → finished goods.
- Choice of process depends on: Material type (metal, polymer, ceramic, composite)
- Product geometry (simple, complex, thin-walled, heavy-duty)
- Required properties (strength, toughness, surface finish, tolerance)
- Production volume (prototype, batch, mass production)

CLASSIFICATION OF MANUFACTURING PROCESS

- **Casting Processes:** Expendable mould casting: Sand, loam, carbon dioxide, plaster, Investment. Permanent mould casting: Die, Centrifugal, Slush, squeeze, Chilled, continuous casting.
- **Forming Processes** (Hot and Cold working)
  a) Forging b) Rolling c) Drawing d) Extrusion
- **Material Removal Processes (Machining Processes)**: - Conventional: Turning, Drilling, Milling, Planing, Shaping.
- **Non-conventional:** Electric discharge machining, Electro-chemical machining.
- **Fabrication Processes**: - Welding (Metal Arc, Submerged Arc, Gas Shield Arc, Plasma arc)
- **Sheet metal forming**: - a) Cutting or Shearing b) Bending c) Forming d) Drawing
- **Regenerative Manufacturing:** Stereolithography, selective laser sintering, Laminated object manufacturing, Fused Deposition Modelling

Comparison (Casting vs Forming vs Machining)

Process	State of Material	Accuracy	Surface Finish	Example Product
Casting	Molten	Low	Poor	Engine block
Forming	Solid (plastic)	Medium	Good	Beams, cans
Machining	Solid	High	Excellent	Shafts, dies

INTRODUCTION TO CASTING

- Casting is the oldest (Since 4000 BC) known manufacturing process for the production of metallic components.
- Casting is a manufacturing process which involves pouring molten metal (Ferrous or non ferrous) into a mould cavity whose shape resembles the shape of the desired product and allowing the molten metal to solidify in it. The solidified part is then taken out of the mould to finish (final product).
- A casting may be defined as a "**metal object obtained by allowing molten metal to solidify in a mould**", the shape of the object being determined by the shape of the mould cavity.

Casting Process

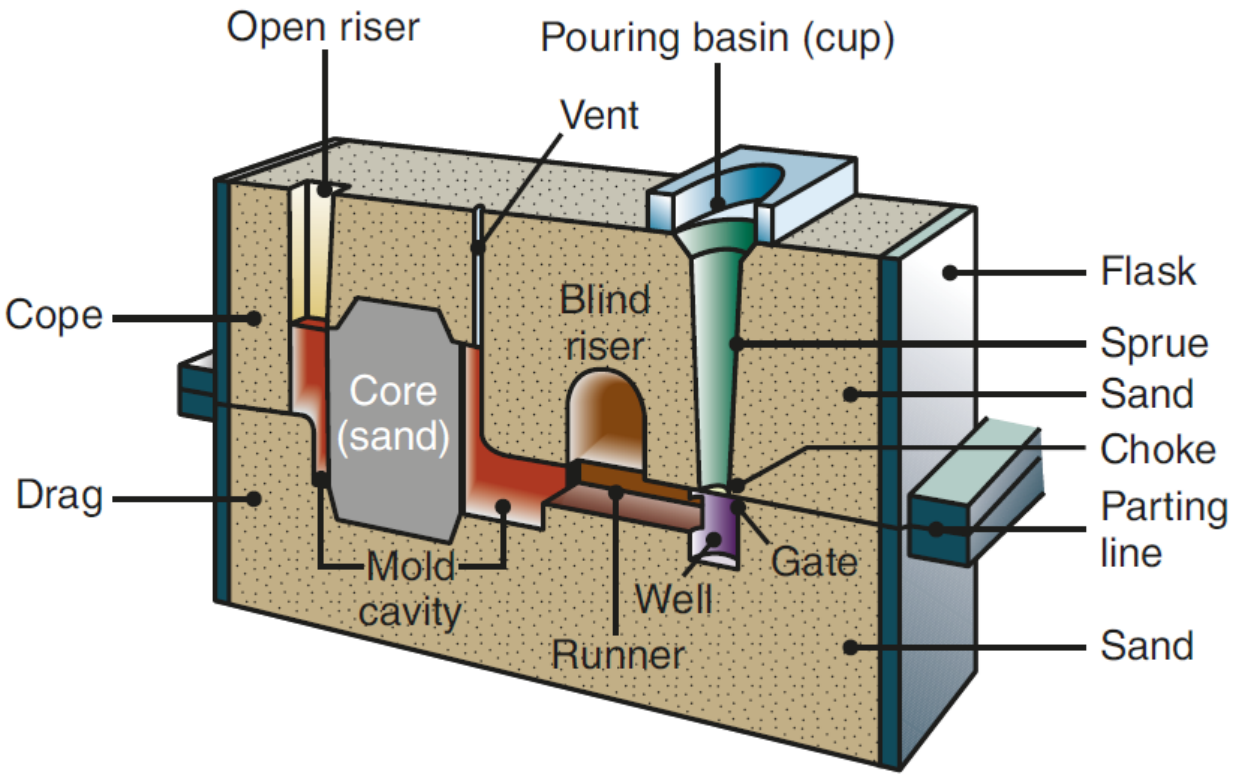

Casting Process

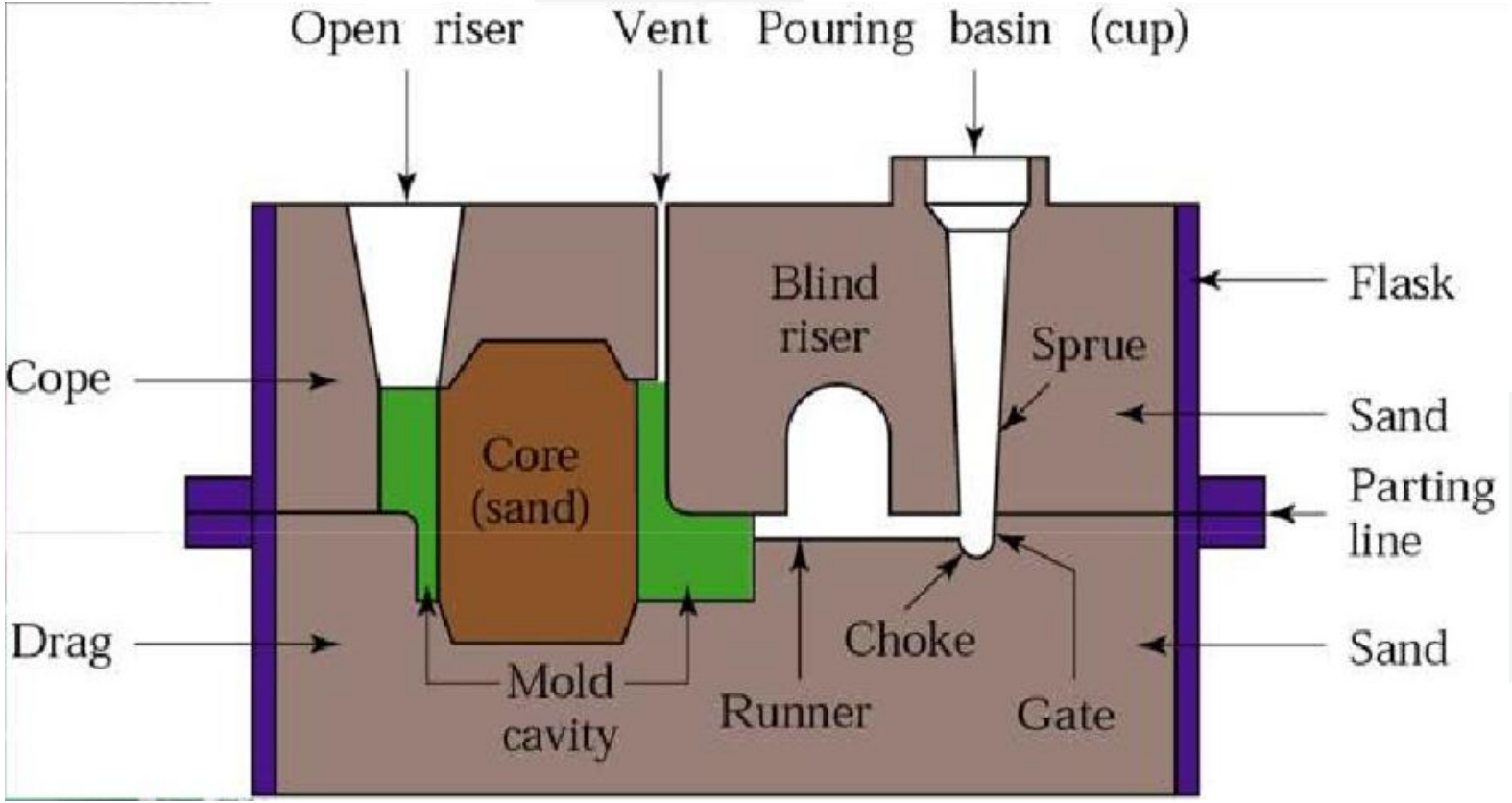

STEPS INVOLVED IN A CASTING PROCESS

- Pattern and core-box making
- Core-making
- Moulding
- Melting
- Pouring
- Solidification
- Fettling and cleaning
- Inspection

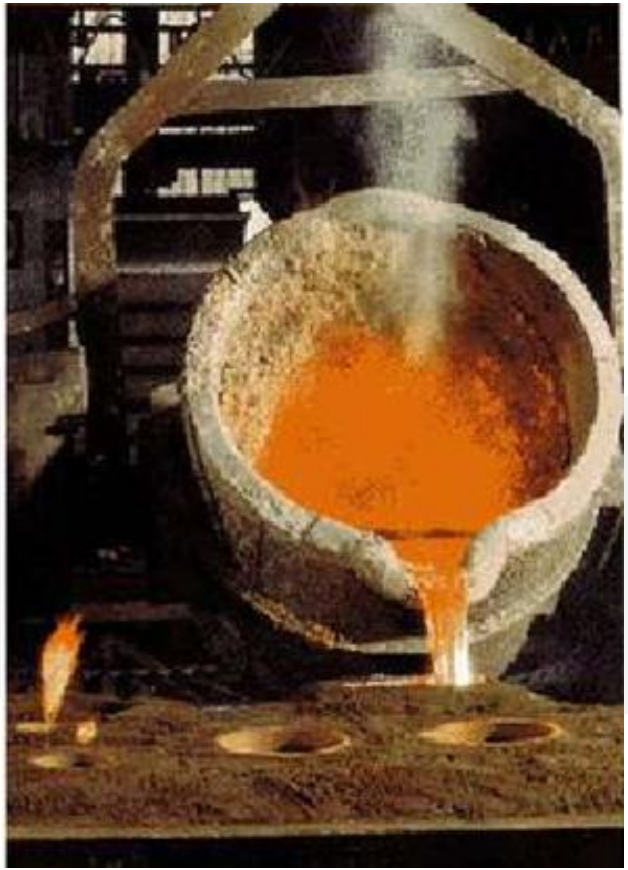

STEPS INVOLVED IN CASTING PROCESS

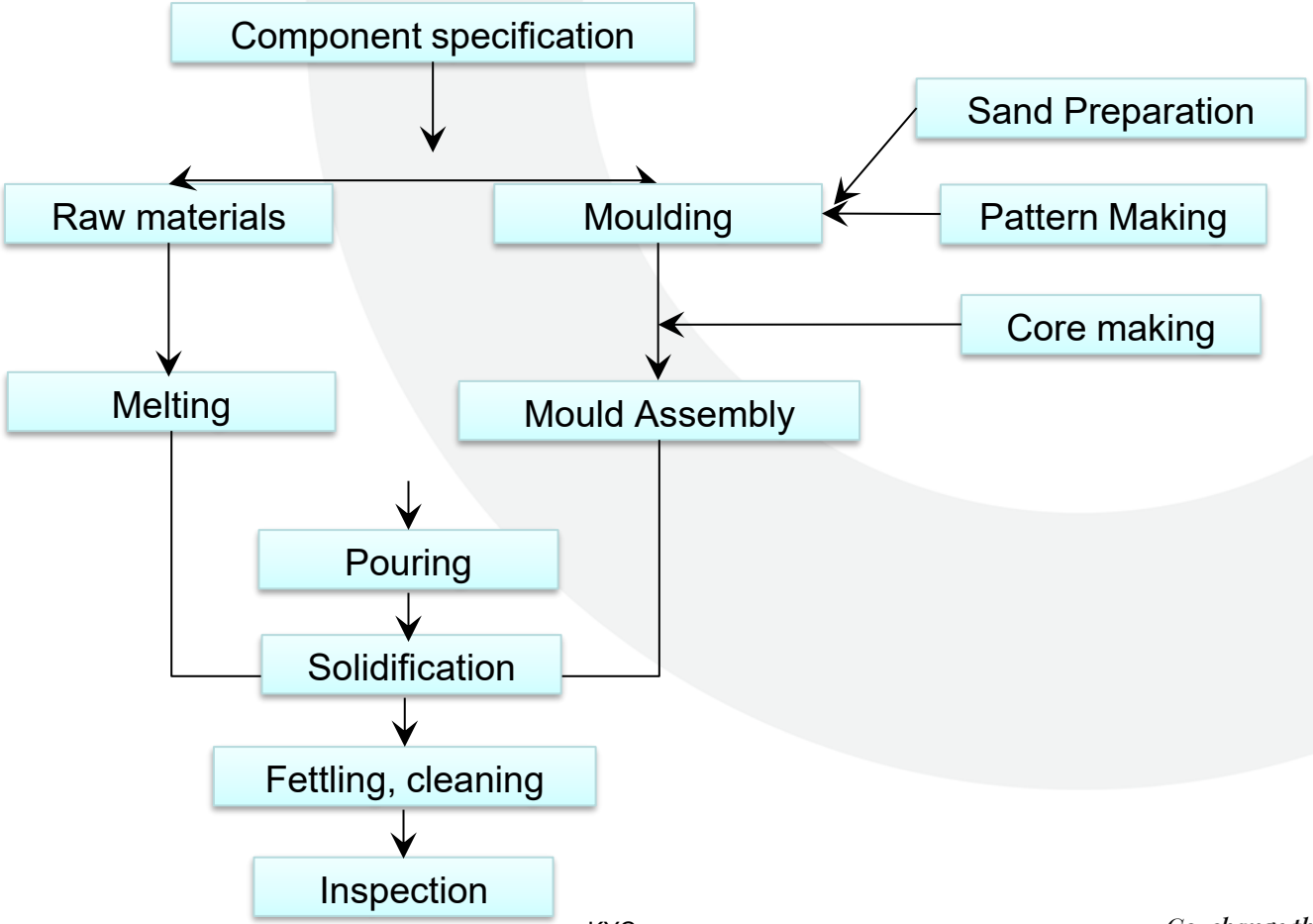

Introduction to Metal Forming

- Metal forming is a very important manufacturing operation. It enjoys industrial importance among various production operations due to its advantages such as cost effectiveness, enhanced mechanical properties, flexible operations, higher productivity, considerable material saving.
- In order to fulfill the requirements of the ever-increasing demands of various types of industries, the manufacturing engineer has to choose the right type of material and the right type of equipment for manufacture so that the cost of production and the energy consumption are minimum.
- The selection of suitable manufacturing process should also include concerns for environmental impacts such as air pollution, waste disposal etc.

Classification of Metal forming processes

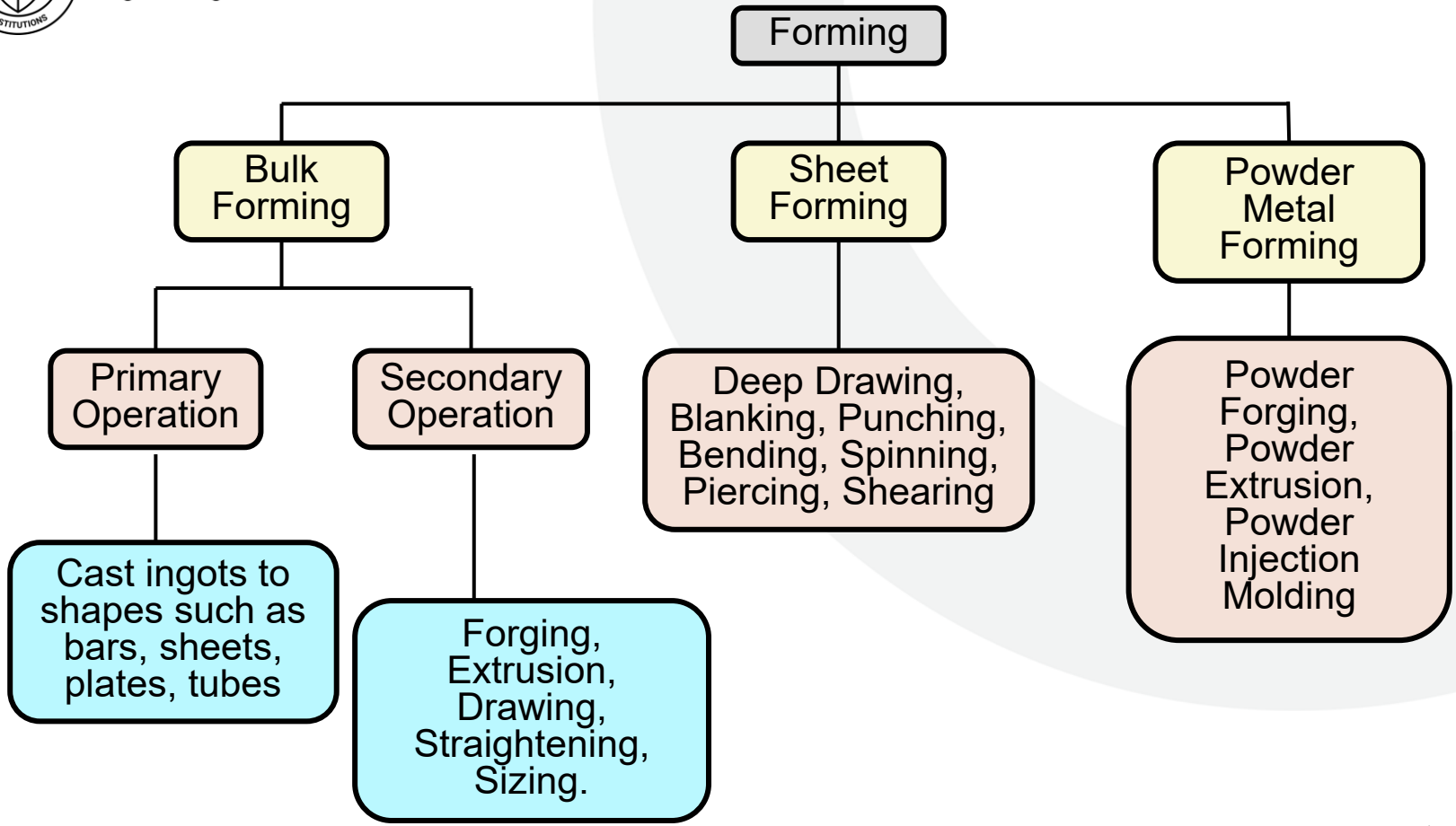

BULK DEFORMATION

- Typically, metal forming processes can be classified into two broad groups. One is bulk forming and the other is sheet metal forming. Bulk deformation refers to the use of raw materials for forming which have low surface area to volume ratio.
- Rolling, forging, extrusion and drawing are bulk forming processes.
- In bulk deformation processing methods, the nature of force applied may be compressive, compressive and tensile, shear or a combination of these forces.
- Bulk forming is accomplished in forming presses with the help of a set of tool and die.
- Examples for products produced by bulk forming are: gears, bushed, valves, engine parts such as valves, connecting rods, hydraulic valves, etc.

Introduction to Forging

- Forging is the working of metal into a useful shape using localized compressive forces by hammering or pressing.
- The oldest of the metalworking arts (primitive blacksmith).
- Replacement of machinery occurred during Industrial revolution.
- Forging machines are now capable of making parts ranging in size of a bolt to a turbine
- Most forging operations are carried out hot, although certain metals may be cold-forged.

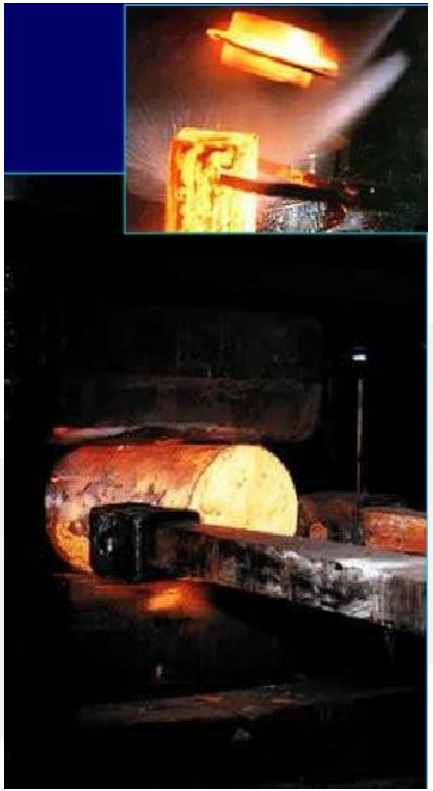

Classification of Forging Processes

❖ **Based on Temperature of the work piece:**

1. **Hot Forging**: (most widely used): Forging is carried out at a temperature above the recrystallization temperature of the metal.

Advantages of Hot Forging:

- High strain rates and hence easy flow of the metal
- Recrystallization and recovery are possible
- Forces required are less

Disadvantages of Hot Forging:

- Lubrication is difficult at high temperatures
- Oxidation and scaling occur on the work
- Poor surface finish
- Dies must withstand high working temperature

Classification of Forging Processes

2. Cold Forging:

- Forging is carried out at a temperature below the recrystallization temperature of the metal.

Advantages:

- Less friction between die surface and work piece
- Lubrication is easy
- No oxidation or scaling on the work
- Good surface finish

Disadvantages of Cold Working:

- Low strain rates, hence less reduction per pass.
- Recrystallization and recovery do not occur.
- Hence, annealing is required for further deformation in subsequent cycles.
- Forces required are high.

Classification of Forging Processes

- **Classification of Forging Processes Based on Arrangement of Dies:**

1. Open Die Forging: Flat dies of simple shape are used.

➢ **Features of open die forging:**

- Repeated impact blows are given on the work
- Less dimensional accuracy
- Suitable only for simple shapes of work
- Requires more skill of the operator
- Usually used for a work before subjecting it to closed die forging (to give approximate shape)
- Dies are simple and less expensive
- It can be analyzed much easily
- It is the simplest of all forging operations

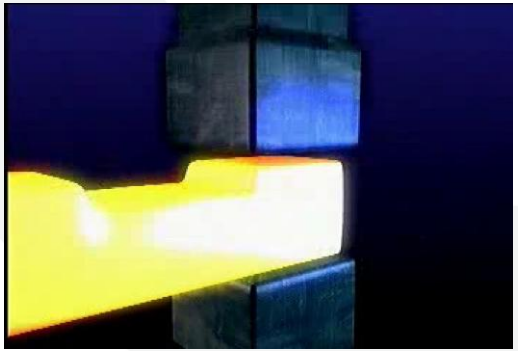

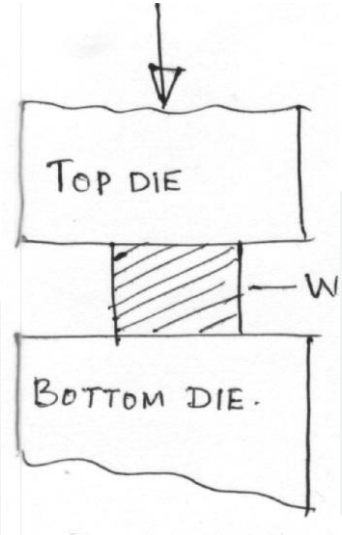

Classification of Forging Processes

2. Closed Die Forging: Work piece is deformed between two dies with impressions (cavities) of the desired final shape on them.

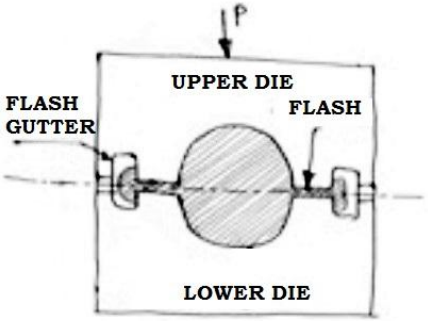

CLOSED DIE FORGING

- **Features of Closed Die Forging:**
- Closed die forging involves two or more steps:
- **i) Blocking Die**: Work is rough forged, close to final shape.
- ii**) Finishing Die**: work is forged to final shape and dimensions.
- Both Blocking Die and Finishing Die are machined into the same die block.
- More number of dies are required depending on the complexity of the job.
- Two die halves close-in & work is deformed under high pressure.
- High dimensional accuracy / close control on tolerances.
- Suitable for complex shapes.
- Dies are complex and more expensive.
- Large production rates are necessary to justify high costs.

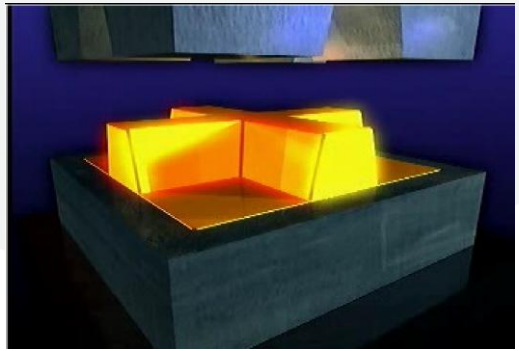

Classification of Forging Processes

- **Significance of Flash in Closed Die Forging:**
- Excess metal is taken initially to ensure that die is completely filled with metal to avoid any voids.
- Excess metal is squeezed out of the die cavity as a thin strip of metal, called flash.
- A flash gutter is provided to reduce the area of flash.
- Thin flash increases the flow resistance of the system & builds up the pressure to high values which ensures that all intricate shapes of cavity are filled.
- Flash design is very critical and important step in closed die forging.
- Extremely thin flash results in very high pressure build up which may lead to **breaking of the dies.**

Classification of Forging Processes

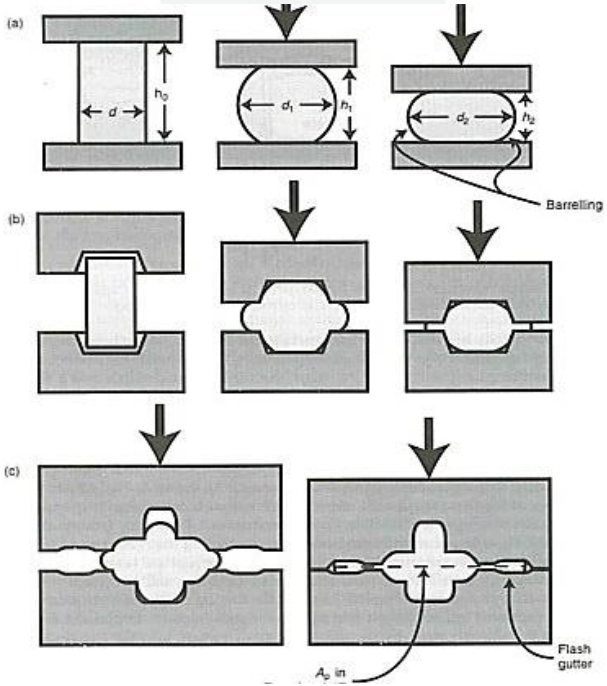

Open-die forging

Closed-die forging

Impression-die forging

Introduction to Extrusion

- **Extrusion** is the process by which a block/billet of metal is reduced in cross section by forcing it to flow through a die orifice under high pressure.
- In general, extrusion is used to produce cylindrical bars or hollow tubes, but shapes of irregular cross section may be produced from the more readily extrudable metals, like aluminum.

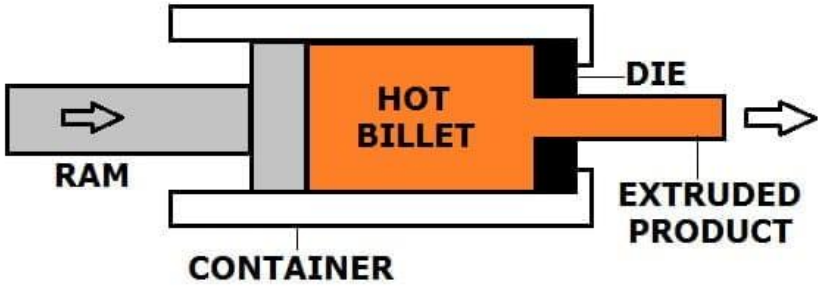

EXTRUSION

- Because of the large forces required in extrusion, most metals are extruded hot under conditions where the deformation resistance of the metal is low.
- However, cold extrusion is possible for many metals and has become an important commercial process.
- The reaction of the extrusion billet with the container and die results in high compressive stresses which are effective in reducing the cracking of materials during primary breakdown from the ingot.
- This is an important reason for the increased utilization of extrusion in the working of metals difficult to form, like stainless steels, nickel-based alloys, and other high-temperature materials.
- Similar to forging, lower ram force and a fine grained recrystallized structure are possible in ***hot extrusion.***
- However, better surface finish and higher strengths (strain hardened metals) are provided by ***cold extrusion.***

EXTRUSION PRODUCTS

- Typical parts produced by extrusion are trim parts used in automotive and construction applications, window frame members, railings, aircraft structural parts.
- Example: Aluminium extrusions are used in commercial and domestic buildings for window and door frame systems, prefabricated houses/building structures, roofing and exterior cladding, curtain walling, shop fronts, etc.
- Furthermore, extrusions are also used in transport for airframes, road and rail vehicles and in marine applications.

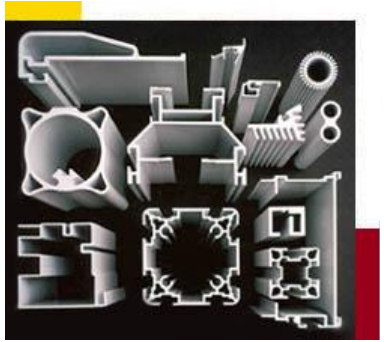

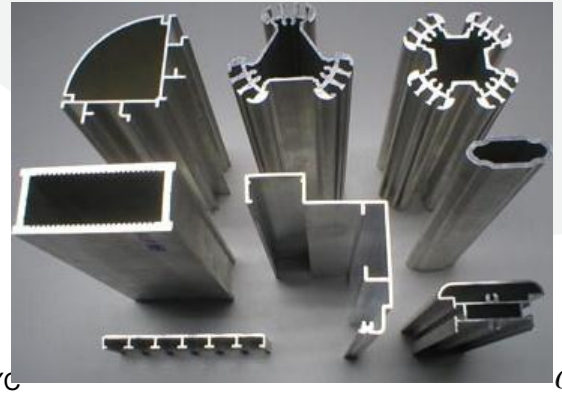

CLASSIFICATION OF EXTRUSION PROCESSES

- There are several ways to classify metal extrusion processes;
- **By direction**
- Direct & Indirect extrusion
- Forward & backward extrusion
- **By operating temperature**
- Hot & cold extrusion
- **By equipment**
- Horizontal and vertical extrusion
- **Special type**
- Hydrostatic Extrusion and Impact extrusion

THE EXTRUSION PROCESS

- The two basic types of extrusion are *direct extrusion and indirect extrusion* (also called inverted, or back, extrusion).
- **Direct extrusion:** The metal billet is placed in a container and driven through the die by the ram.
- A dummy block, or pressure plate, is placed at the end of the ram in contact with the billet.
- **Indirect-extrusion:** A hollow ram carries the die, while the other end of the container is closed with a plate.
- Frequently, for indirect extrusion, the ram containing the die is moved, and the container with the billet is kept stationary.

DIRECT EXTRUSION

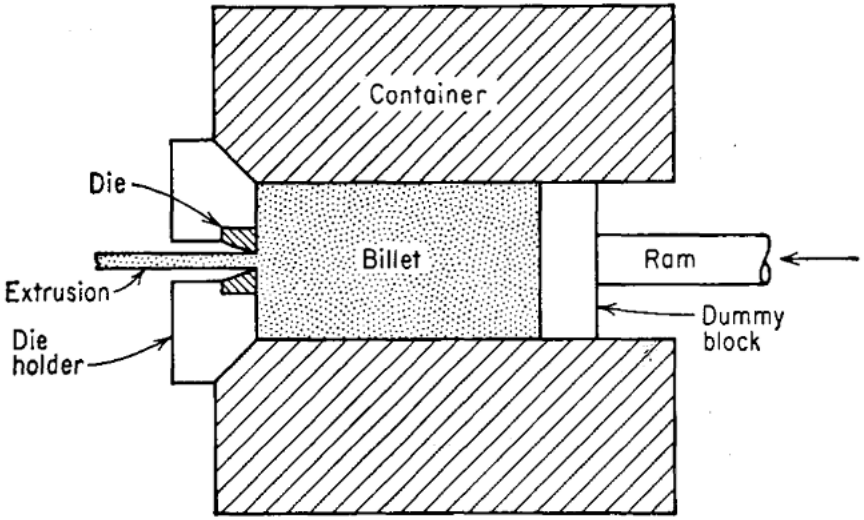

Direct extrusion

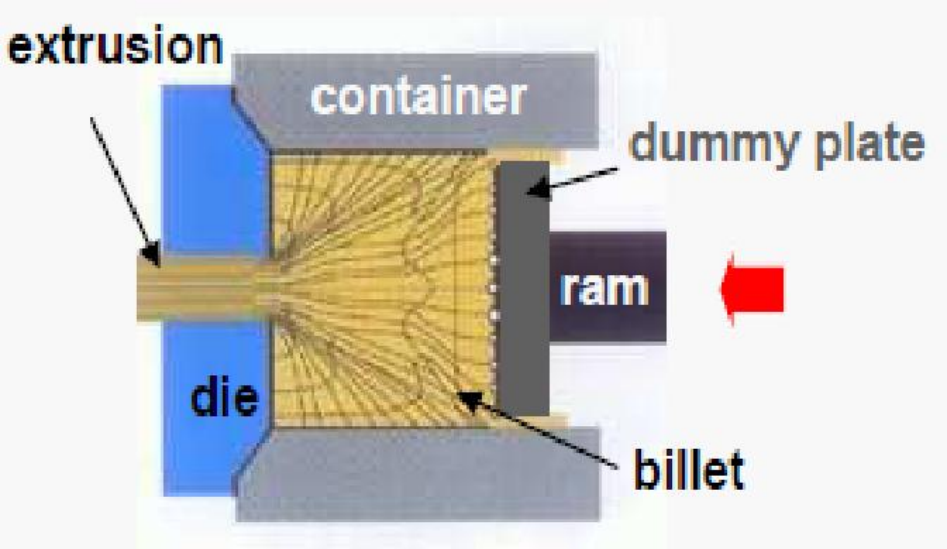

Direct Extrusion

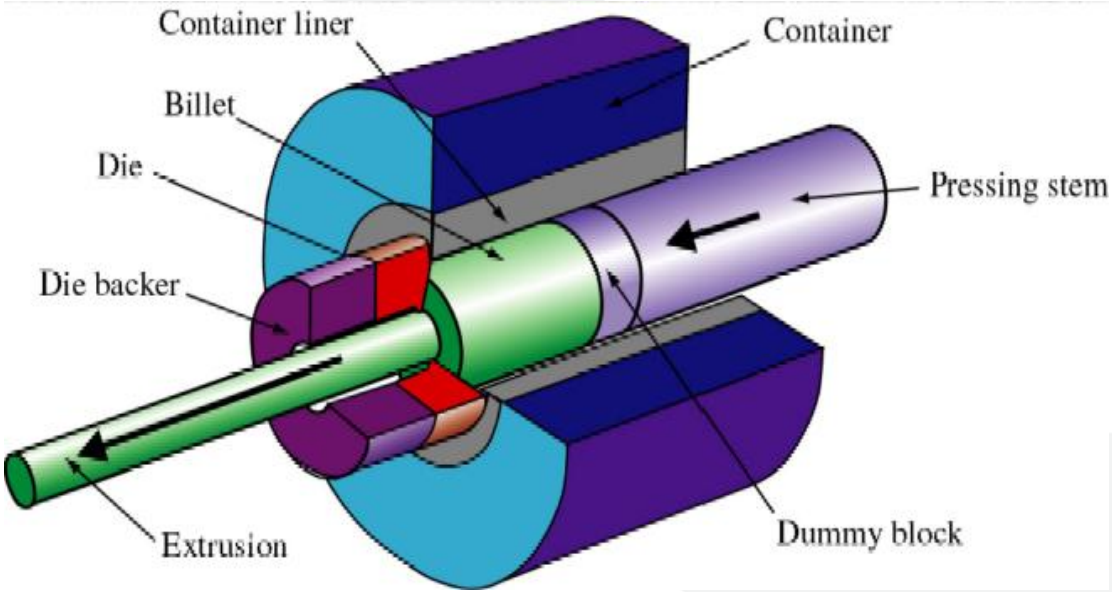

Fig : Schematic illustration of direct extrusion process.

INDIRECT EXTRUSION

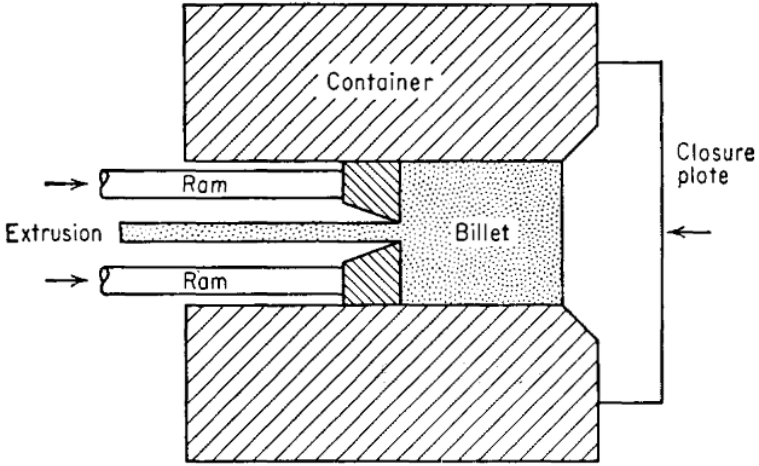

Indirect extrusion

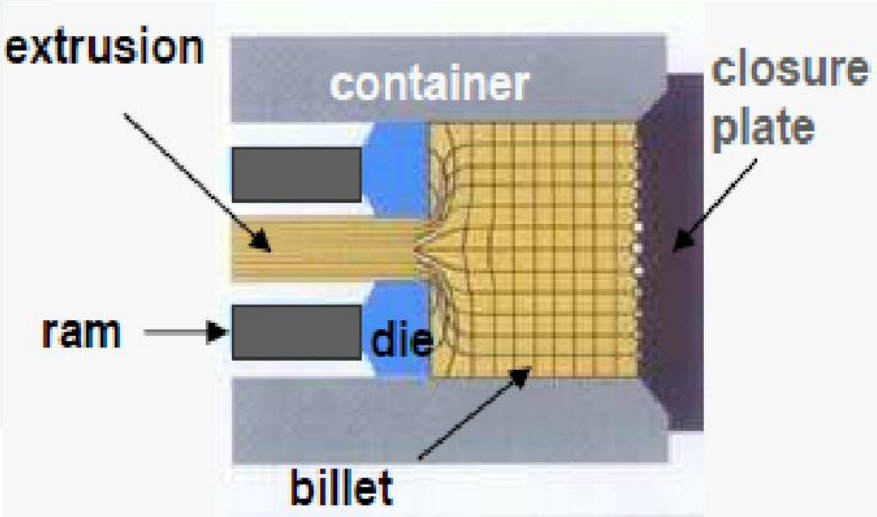

INDIRECT EXTRUSION

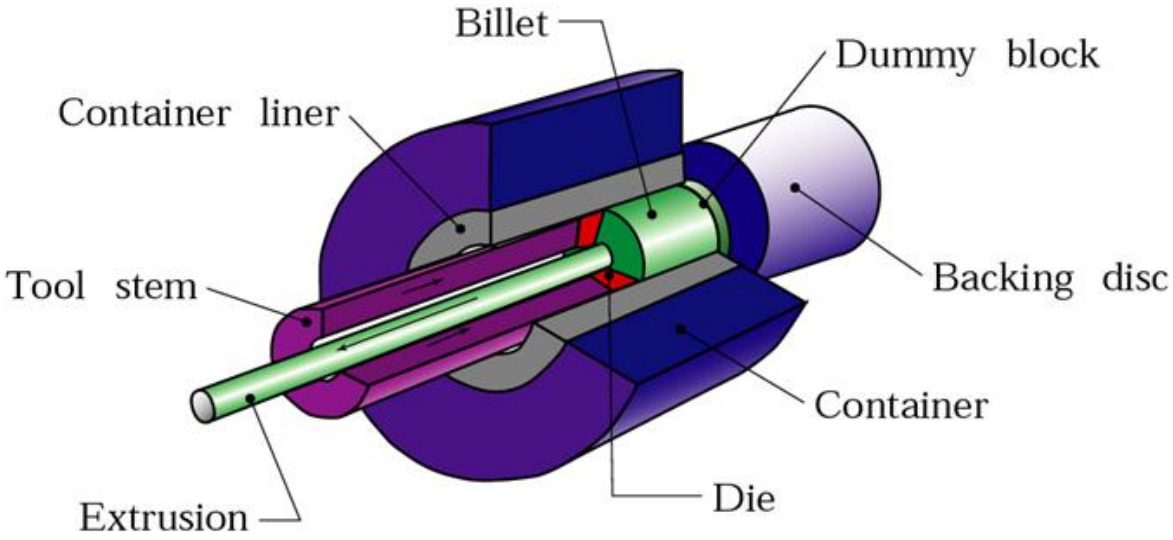

Introduction to Rolling

After casting, ingots are rolled into one of three intermediate shapes called blooms, billets, and slabs:

- Blooms have square cross section 6” x 6” or larger. They are rolled into structural shapes.
- Billets have square cross section 1.5” x 1.5” or larger. they are rolled into bars and rods.
- Slabs have rectangular cross section 10” x 1.5” or larger. They are rolled into plates, sheets and strips.
- As any other metal forming process, rolling can be performed hot (hot rolling) or cold (cold rolling).
- Most rolling is carried out by hot rolling, owing to the large amount of deformation required.
- Hot-rolled metal is generally free of residual stresses and has isotropic properties.
- On the other hand, it does not have close dimensional tolerances, and the surface has a characteristic oxide scale. Moreover, cold rolled metals are stronger.

Types of Rolling

- Based on work piece geometry :
  - Flat rolling - used to reduce thickness of a rectangular cross section
  - Shape rolling - square cross section is formed into a shape such as an I-beam
- Based on work temperature :
  - Hot Rolling – most common due to the large amount of deformation required
  - Cold rolling – produces finished sheet and plate stock

ROLLING

- **Rolling** is a bulk deformation process in which the thickness of the work is reduced by compressive forces exerted by two opposing rolls. The rolls rotate to pull and simultaneously squeeze the work between them.
- Rotating rolls perform two main functions:
- Pull the work into the gap between them by friction between work part and rolls.
- Simultaneously squeeze the work to reduce its cross section.

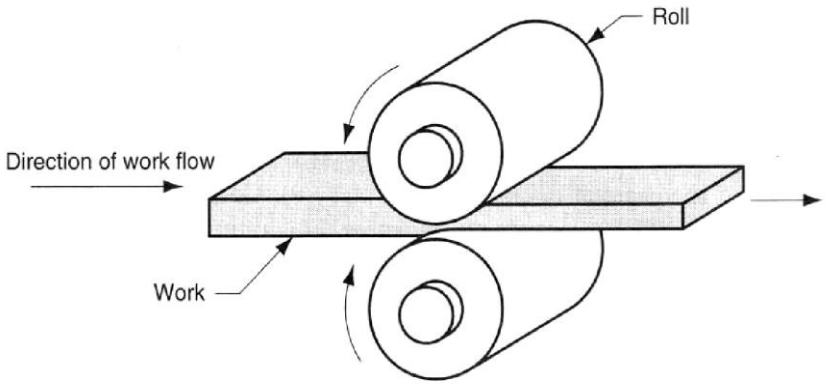

Introduction to Rolling

The basic process shown in the previous figure is “Flat Rolling”, used to reduce the thickness of a rectangular cross section. A closely related process is “shape rolling”, in which a square cross section is formed into a shape such as an I-beam.

Shape Rolling

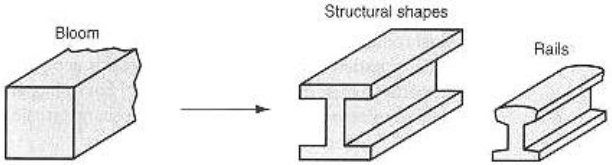

Flat Rolling

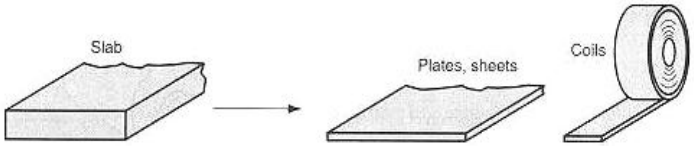

Shape Rolling

Introduction to Rolling

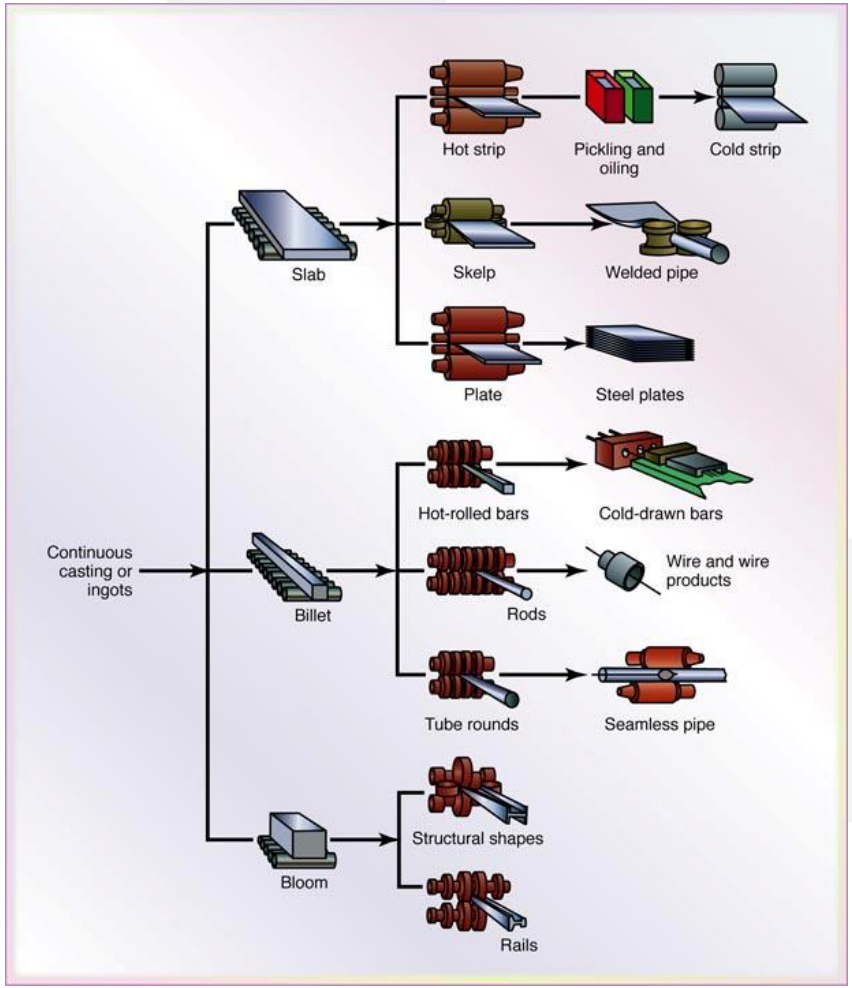

Roll Arrangements

Schematic illustration of various roll arrangements: (a) four-high rolling mill showing various features. The stiffness of the housing, the rolls, and the roll bearings are all important in controlling and maintaining the thickness of the rolled strip; (b) two-hill mill; (c) three-high mill; and (d) cluster (or Sendzimir) mill.

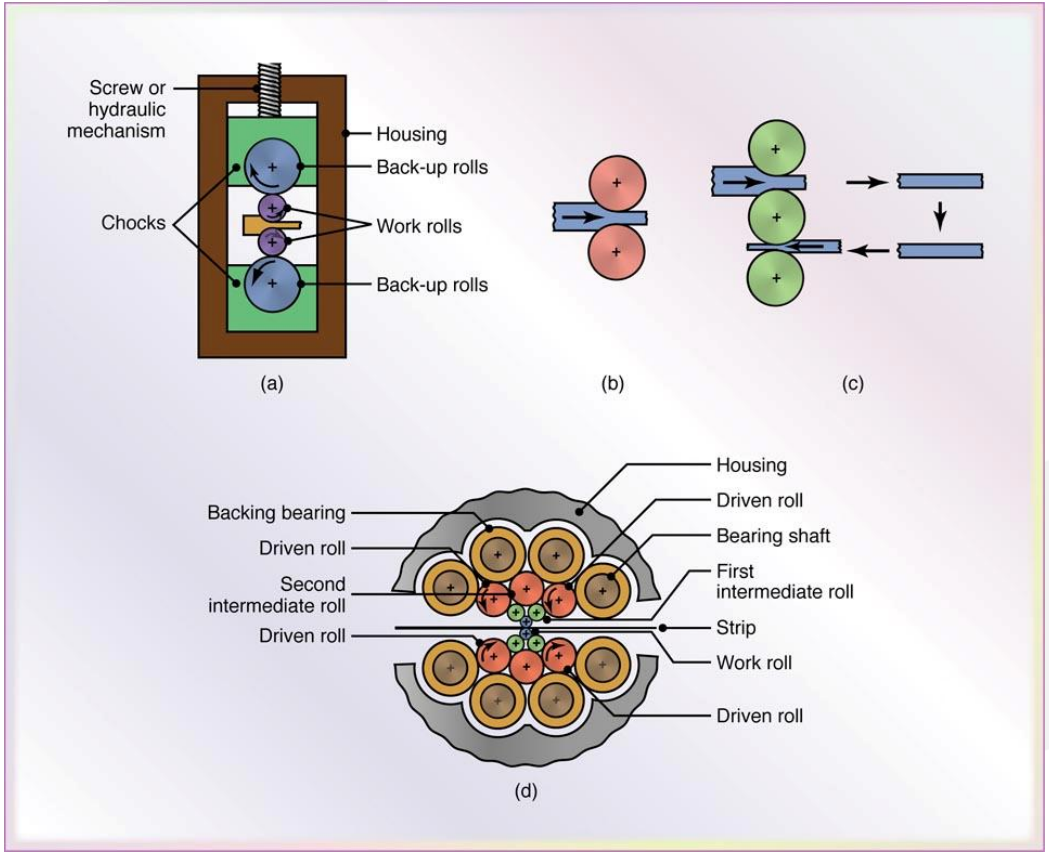

Roll configurations in rolling mills

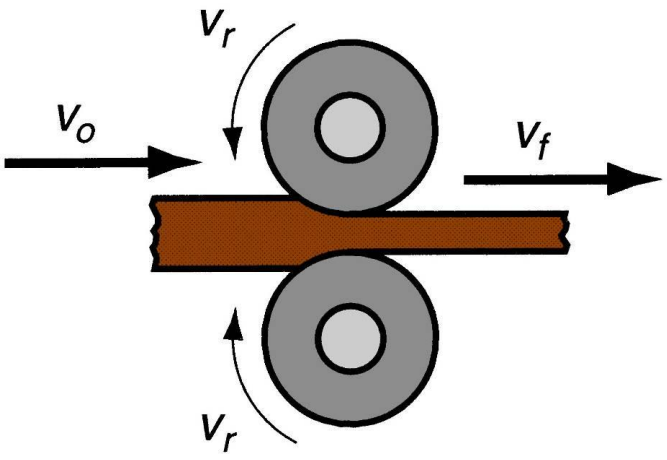

(a)

Two High Rolling Mill.

MACHINING PROCESS

- Cast, formed and shaped products may need further machining operations to give them the desired final shape, after removal of extra material in the form of chips.
- Machining processes involves removal of material from a work piece by
  - CUTTING (As in case of machine tools like lathe, shaper etc)
  - ABRASIVE (As in case of a grinding wheel)
  - NON TRADITIONAL (Processes such as EDM, ECM Etc.)

METAL CUTTING PROCESSES

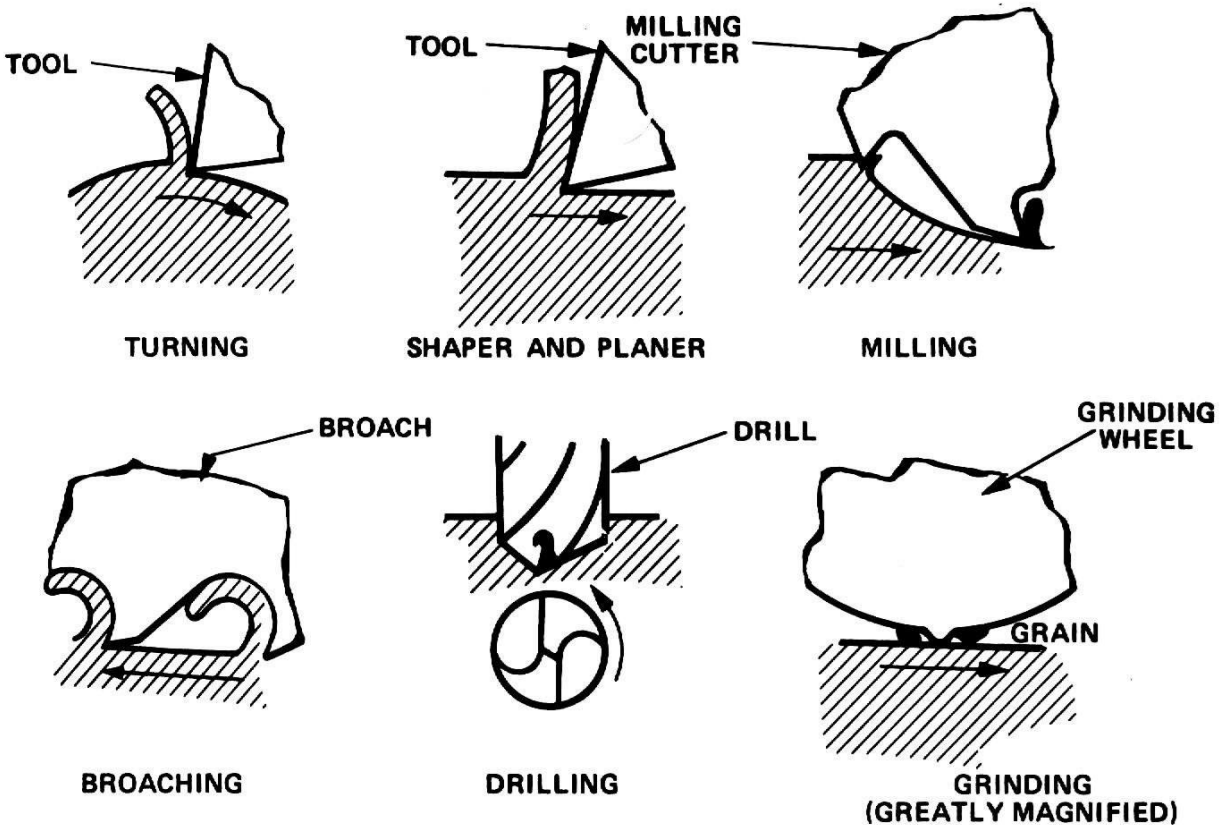

TURNING

- High proportion of work machined in shop turned on lathe
  - Turning tool set to given depth of cut, fed parallel to axis of work (reduces diameter of work)
    - Chip forms and slides along cutting tool's upper surface created by side rake

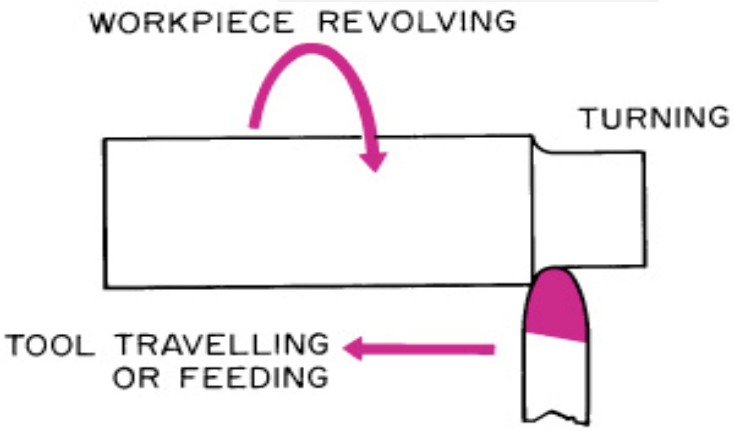

Planing or Shaping

- Workpiece moved back and forth under cutting tool
- **In Shaping machining operation** workpiece is held stationary while cutting tool (ram) is reciprocated across the work.
- **Planing** is similar **machining operation** but the cutting tool remains stationary while workpiece (worktable) is reciprocated under the cutter

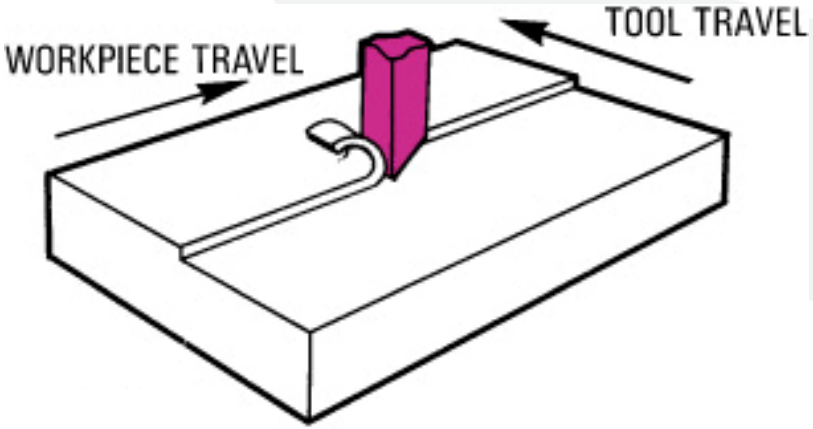

MILLING

- Multi-tooth tool having several equally spaced cutting edges around periphery
- Each tooth considered single-point cutting tool (must have proper rake and clearance angles)
- Workpiece held in vise or fastened to table
  - Fed into horizontal revolving cutter
  - Each tooth makes successive cuts
  - Produces smooth, flat, or profiled surface depending on shape of cutter

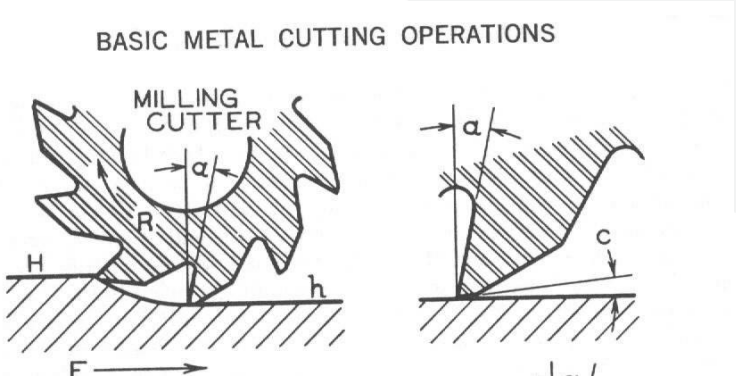

Common Machining Operations

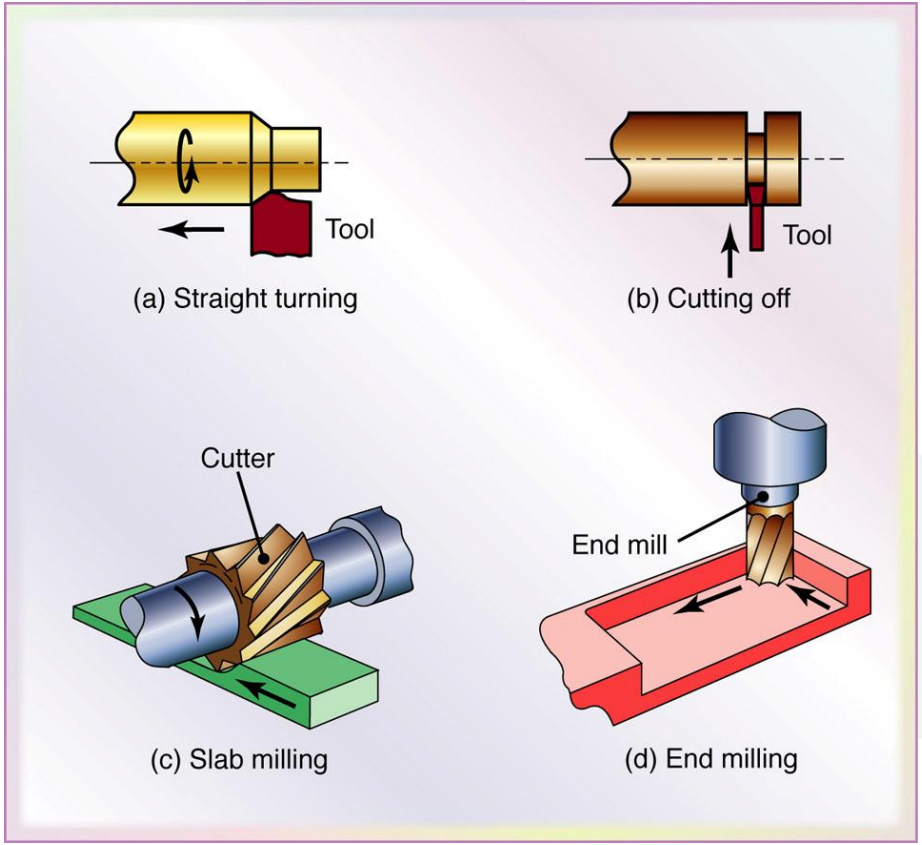

Questions

- Explain the sequence of steps involved in sand casting and evaluate the role of solidification in determining final product quality.
- Analyze the causes of porosity defects in castings and propose remedies based on design and process modifications.
- Illustrate the significance of pattern allowances in casting and justify their necessity for dimensional accuracy.
- Distinguish between risers and gates in a casting system and evaluate their effect on metal flow and solidification.

Questions

- Assess the suitability of casting for producing turbine blades and defend its advantages over machining.
- Design a simple gating system for a cylindrical casting and justify your choice of riser placement.
- Classify forming processes into bulk deformation and sheet-metal forming and explain their industrial relevance with examples.
- Analyze the influence of cold working and hot working on mechanical properties such as strength, ductility, and residual stresses.
- Compare open-die forging and closed-die forging in terms of accuracy, grain flow, and material utilization.

Questions

- Evaluate the limitations of extrusion for producing complex profiles and recommend conditions where it is most effective.
- Illustrate the principle of deep drawing and assess the factors influencing drawability of sheet metals.
- Examine the role of lubrication in rolling operations and predict defects if lubrication is inadequate.
- Differentiate springback in bending from wrinkling in deep drawing and suggest corrective measures for each.
- Explain the mechanics of orthogonal cutting and analyze the effect of rake angle on chip formation.

Questions

- Compare turning, milling, and drilling processes in terms of tool motion, material removal rate, and surface finish.
- Assess the role of cutting fluids in machining and predict possible consequences of dry machining.
- Evaluate tool wear mechanisms in machining and recommend strategies to enhance tool life.
- Illustrate the significance of tolerances and surface finish achieved by machining relative to casting and forming processes.
- Critically analyze the statement: “Machining is indispensable in modern manufacturing despite advancements in casting and forming.

Metal Joining Processes

- **Metal Joining Methods**
- **Permanent Joints** → cannot be disassembled without damaging the parts.
  - Examples: **welding, soldering, brazing, riveting**.
- **Temporary Joints** → can be easily disassembled without damage.
  - Examples: **bolted joints, screwed joints, cotter joints, pinned joints**.
- **Welding Definition**: Fusion of two materials using heat, pressure, or both.
- **Advantages**: strong joints, permanent bond.
- **Limitations**: residual stresses, distortion, needs skilled labor.

Metal Joining Processes

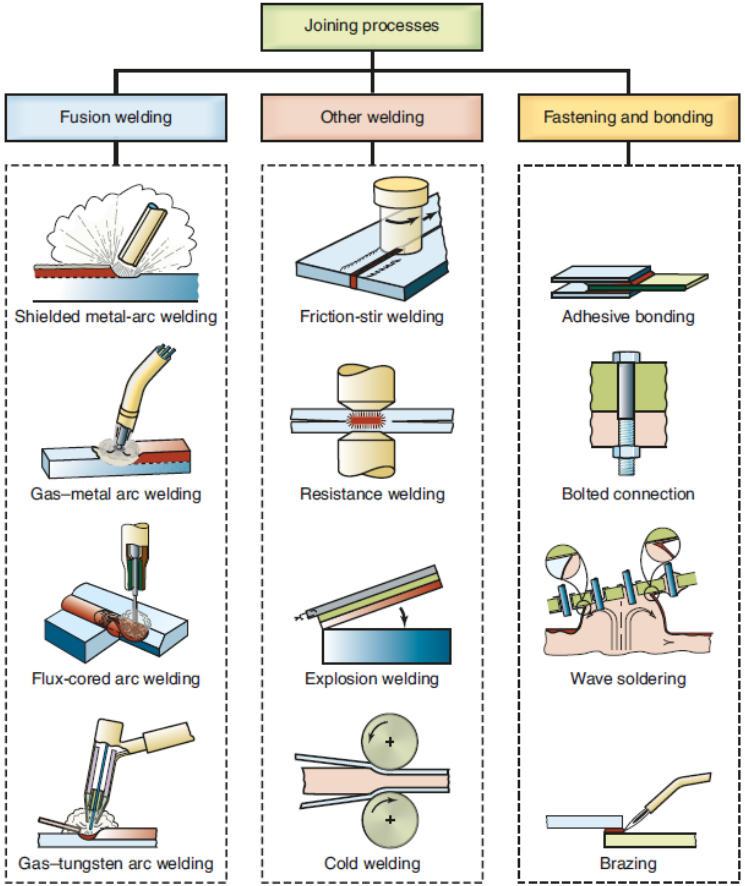

WELDING

- A **weld** is defined by the American Welding Society (AWS) as “a localized **coalescence** (the fusion or growing together of the grain structure of the materials being welded) of metals or nonmetals produced either by heating the materials to the required welding temperatures, with or without the application of pressure, or by the application of pressure alone, and with or without the use of filler materials”.
- **Welding** is defined as “a joining process that produces coalescence of materials by heating them to the welding temperature, with or without the application of pressure or by the application of pressure alone, and with or without the use of filler metal”

WELDING

- **Welding** is a process of joining two similar or dissimilar metals by fusion, with or without the application of pressure and with or without the use of filler metal.
- The fusion of metal takes place by means of heat. The heat may be obtained from electric arc. electric resistance, chemical reaction, friction or radiant energy.
- **Autogenous Welding:** The process of joining similar metals by melting the edges together, without the addition of filler metal, is called autogenous welding.
- **Homogeneous Welding:** The process of joining similar metals with the help of filler rod of the same metal is called homogeneous welding.

WELDING

- **Heterogeneous Welding:** The process of joining dissimilar metals using filler rod is called heterogeneous welding.
- **Weldability:** Weldability of a metal is the ease with which two similar or dissimilar metals are joined by fusion with or without the application of pressure and with or without the use of filler metal.
- **Base Metal:** The metal to be joined is termed as the base metal.
- **Bead or Weld Bead**: Bead is the metal added during welding.
- **Weld Pass:** A single movement of the welding torch or electrode along the length of the joint, which results in a bead, is a weld pass.

WELDING

- **Backing:** It is the material support provided at the root side of a weld to aid in the control of penetration.
- **Deposition Rate:** The rate at which the weld metal is deposited per unit time (kg/hr).
- **Penetration:** It is the depth upto which the weld metal combines with the base metal as measured from the top surface of the joint.
- **Root:** It is the point at which the two pieces to be joined by welding are nearest to each other.
- **Tack Weld:** A small weld, generally used to temporarily hold the two pieces together during actual welding is called the tack weld.

CLASSIFICATION OF WELDING

- Various welding and allied processes are classified as follows

❖ **Gas Welding**
- Air-acetylene welding
- Oxy acetylene welding
- Oxy-hydrogen welding
- Pressure gas welding

❖ **Arc Welding**
- Carbon arc welding
- Shielded metal arc welding
- Flux cored arc welding
- Submerged arc welding
- TIG (Tungsten Inert Gas) welding
- MIG (Metal Inert Gas) welding
- Plasma arc welding
- Electroslag welding
- Electrogas arc welding
- Stud arc welding.

CLASSIFICATION OF WELDING

- **Resistance Welding**
  - Spot welding
  - Seam welding
  - Projection welding
  - Resistance butt welding
  - Flash butt welding
  - Percussion welding
  - High frequency resistance welding.
- **Thermo-chemical welding processes**
  - Thermit welding
  - Atomic hydrogen welding
- **Radiant Energy Welding Processes**
  - Electron beam welding
  - Laser beam welding

- **Solid State Welding**
  - Cold welding
  - Diffusion welding
  - Explosive welding
  - Forge welding
  - Friction welding
  - Hot pressure welding
  - Roll welding
  - Ultrasonic welding

CLASSIFICATION OF WELDING

- Welding processes can also be divided into the following two groups:

1. **Forge or Pressure Welding (Plastic Welding)**

- In forge or pressure welding, the workpieces are heated to plastic state and then, the workpieces are joined together by applying external pressure on them.

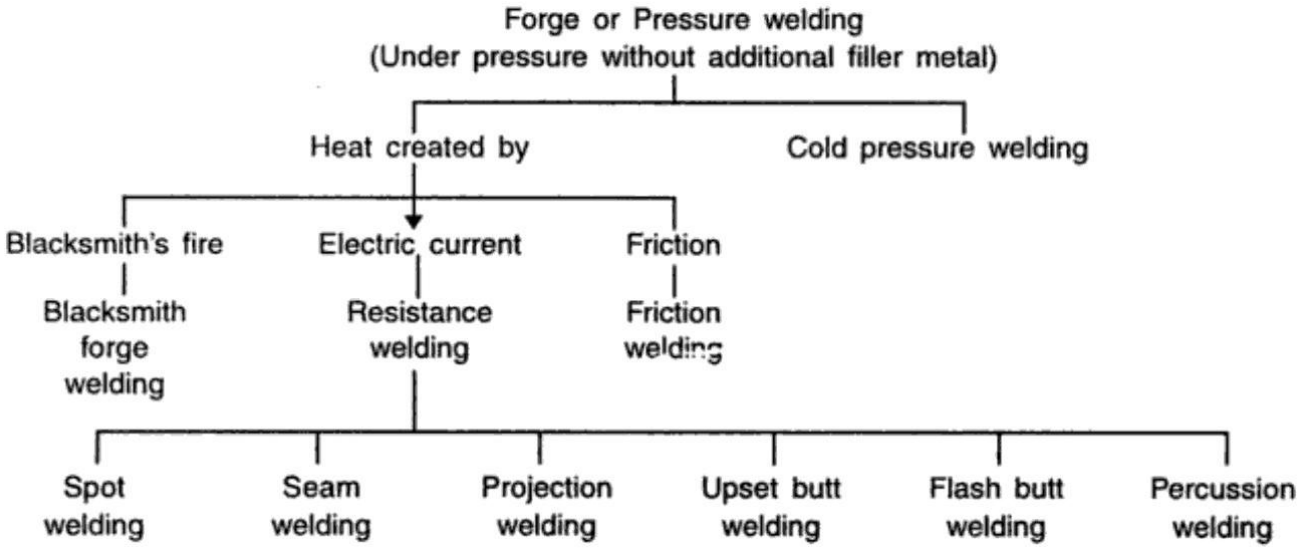

CLASSIFICATION OF WELDING

2. **Fusion or Non-pressure Welding:** In this welding, the material at the joint is heated lo a molten slate and then allowed to solidify.

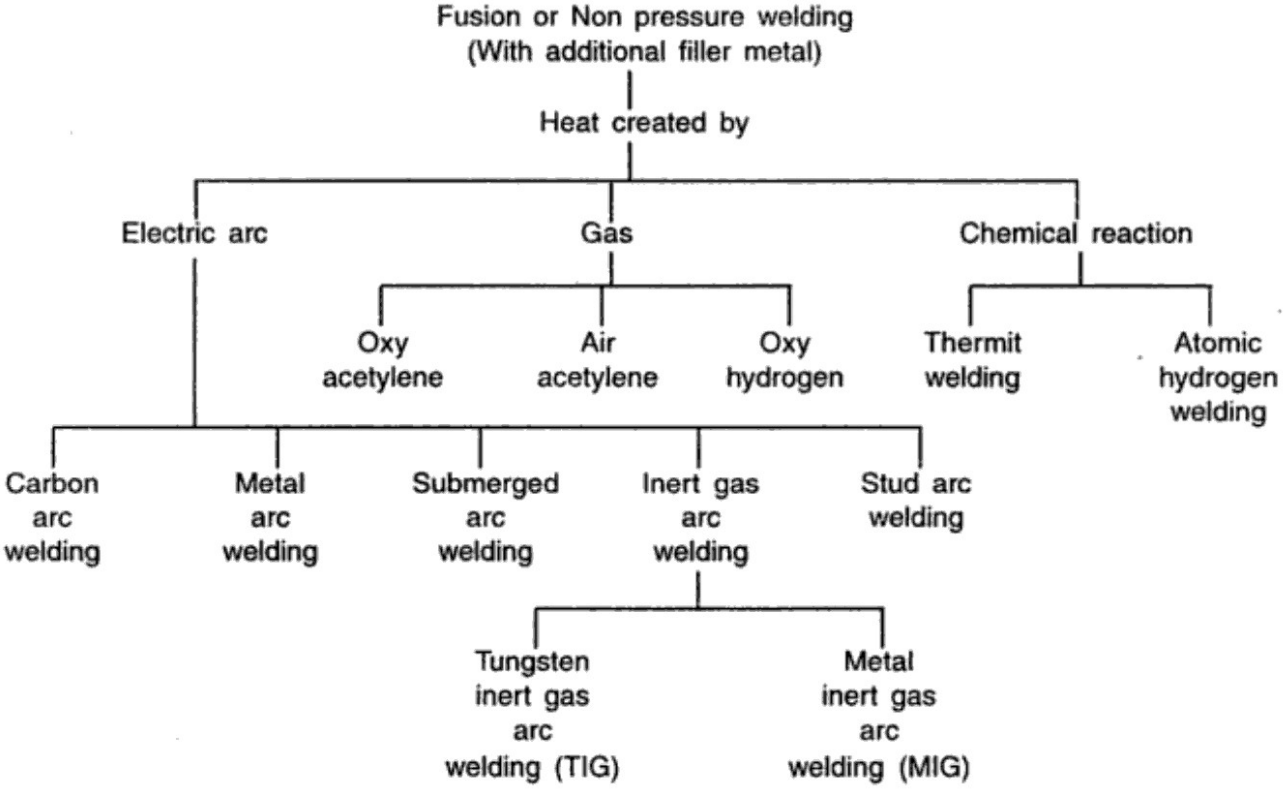

ADVANTAGES OF WELDING

- A good weld is as strong as the base metal.
- A large no. of metals/alloys can be joined by welding.
- Repair by welding is very easy. Welding can be easily mechanized.
- Portable welding equipment is available.
- General welding equipment is not very costly.
- Total joining cost is less in case of welding joint.

LIMITATIONS OF WELDING

- Welding produces the harmful radiation, fumes and spatter.
- A skilled welder is required.
- Welding heat produces metallurgical changes.
- Edge preparation is required before welding.
- More safety devices are required.
- Jigs and fixtures are required to hold the parts to be welded.

SHIELDED METAL ARC WELDING (SMAW)

- Arc welding is widely used method of joining the metal parts. Here the source of heat is an electric arc.
- In arc welding, arc is generated between the positive pole of D.C. (direct current) called anode and negative pole of D.C. called cathode.
- When these two poles are brought together and separated for a small distance (1.5 to 3 mm) such that the current continues to flow through a path of ionized particles, called plasma, an electric arc is formed.
- Since the resistance of this ionized gas column is high, so more ions will flow from anode to the cathode. Heat is generated as the ions strike the cathode.
- Shielded metal arc welding (SMAW) uses a consumable stick electrode that conducts the welding current from the electrode holder to the work, and as the arc melts the end of the electrode away, it becomes part of the weld metal.
- Stick electrodes are available in lengths of 12in, 14in and 18in (300 mm, 350 mm, and 450 mm).

SHIELDED METAL ARC WELDING (SMAW)

- The welding arc vaporizes the solid flux that covers the electrode so that it forms an expanding gaseous cloud to protect the molten weld metal.
- In addition to fluxes protecting molten weld metal, they also perform a number of beneficial functions for the weld, depending on the type of electrode being used.
- SMA welding equipment can be very basic as compared to other welding processes.
- It consist of a welding transformer and two welding cables with a work clamp and electrode holder.
- There are more types and sizes of SMA welding electrodes than there are filler metal types and sizes for any other welding process.
- This wide selection of filler metal allows welders to select the best electrode type and size to fit their specific welding job requirements.
- Therefore, a wide variety of metal types and metal thicknesses can be joined with one machine.

SHIELDED METAL ARC WELDING (SMAW)

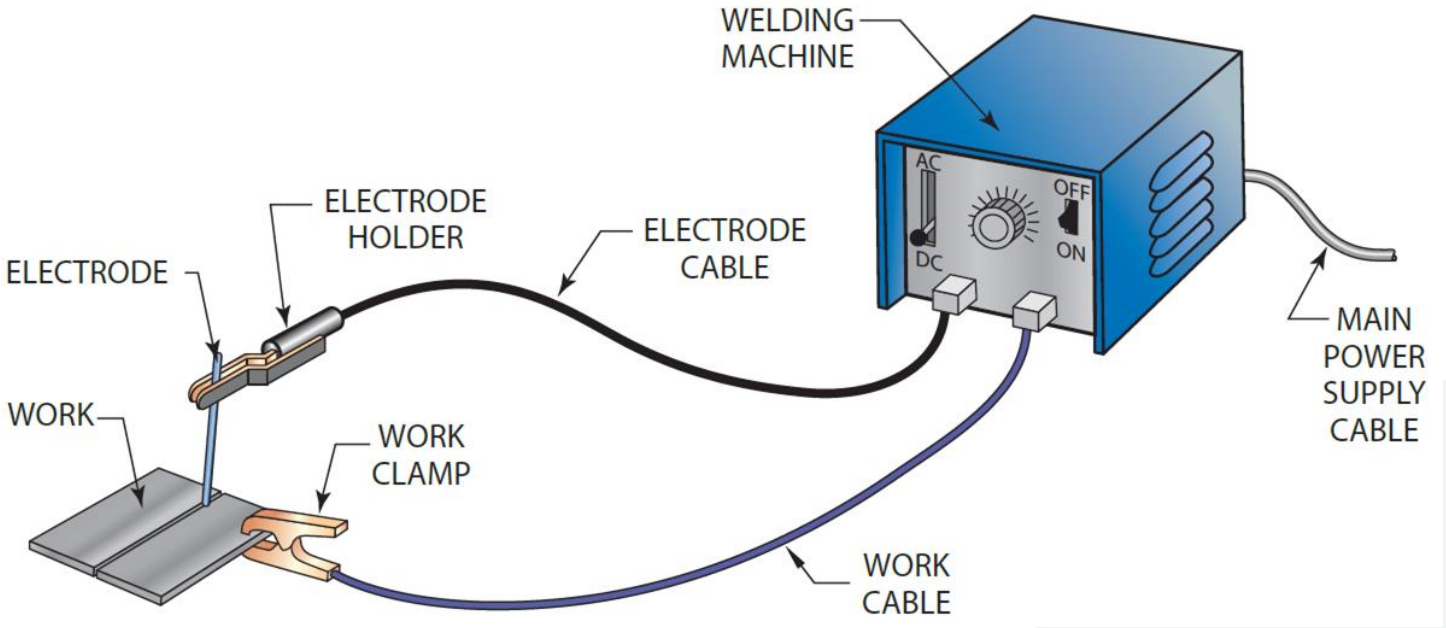

Shielded metal arc welding equipment

SHIELDED METAL ARC WELDING (SMAW)

- Shielded metal arc welding (SMAW) is a welding process that uses a flux-covered metal electrode to carry an electrical current.
- The current forms an arc across the gap between the end of the electrode and the work.
- The electric arc creates sufficient heat to melt both the electrode and the work.
- Molten metal from the electrode travels across the arc to the molten pool on the base metal, where they mix together.
- The end of the electrode and molten pool of metal is surrounded, purified, and protected by a gaseous cloud and a covering of molten flux produced as the flux coating of the electrode burns or vaporizes.
- As the arc moves away, the mixture of molten electrode and base metal solidifies and becomes one piece.
- At the same time, the molten flux solidifies, forming a solid slag. Some electrode types produce heavier slag coverings than others.

SHIELDED METAL ARC WELDING (SMAW)

- SMAW is a widely used welding process because of its low cost, flexibility, portability, and versatility. The machine and the electrodes are low in cost.
- The source of heat for arc welding is an electric current. An electric current is the flow of **electrons**. Electrons flow through a conductor from negative (-) to positive (+).
- Resistance to the flow of electrons (electricity) produces heat. The greater the resistance, the greater the heat. Air has a high resistance to current flow.
- As the electrons jump the air gap between the end of the electrode and the work, a great deal of heat is produced.
- Electrons flowing across an air gap produce an arc.
- An arc's temperature is dependent on the voltage, arc length, and the atmosphere (gas or vapor) it is passing through.
- The arc temperature can range from approximately 5500°F (3000°C) to more than 36,000°F (20,000°C), but most SMA welding arcs have effective temperatures of approximately 11,000°F (6100°C).

SHIELDED METAL ARC WELDING (SMAW)

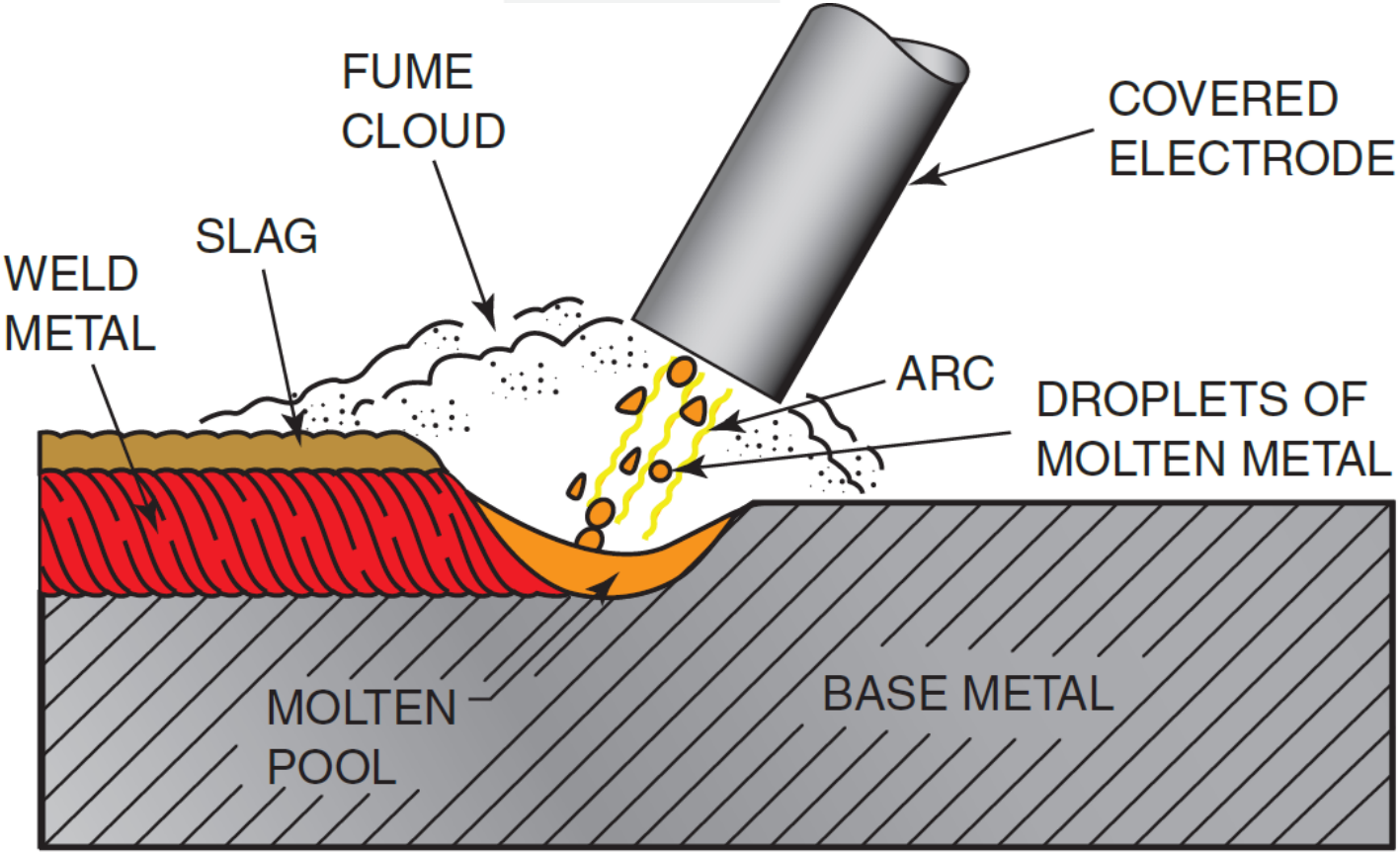

SHIELDED METAL ARC WELDING (SMAW)

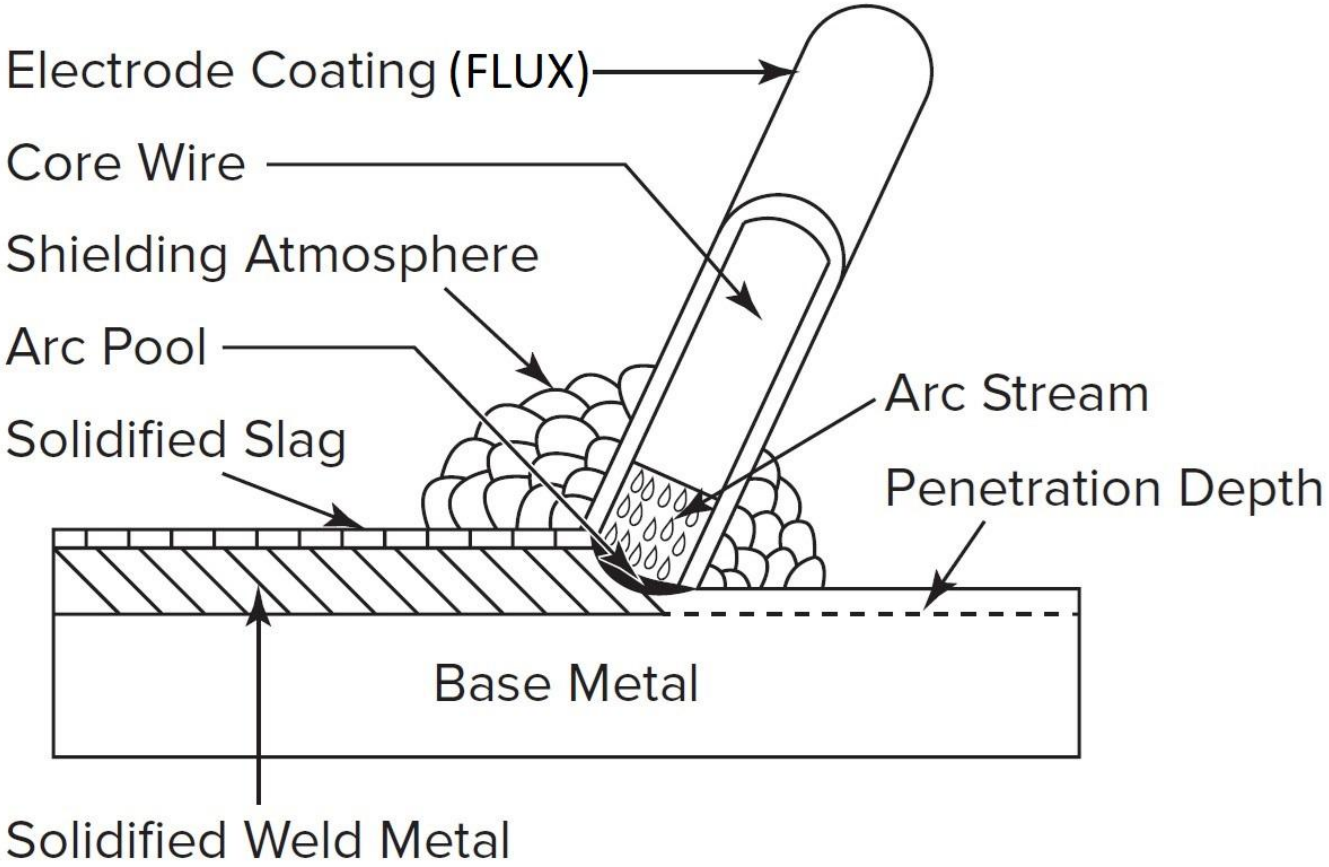

SHIELDED METAL ARC WELDING (SMAW)

- **Materials for Electrode Coverings:** Materials used in the coverings of shielded arc electrodes may be classified according to their purpose:
  - Fluxes
  - Deoxidizers
  - Slagging ingredients
  - Alloying ingredients
  - Gas reducers
  - Binders
  - Arc stabilizers
  - Shielding gas

SHIELDED METAL ARC WELDING (SMAW)

- Sodium and potassium silicates are universally used as binders; some organic gums also have a limited use for this purpose.
- Ferro-alloys and pure metals serve as deoxidizers and alloying ingredients. The alkaline earth metals are the best arc stabilizers.
- Wood flour, wood pulp, refined cellulose, cotton linters, starch, sugar, and other organic materials provide a shield of reducing gases.
- Fluxes and slagging ingredients include silica, alumina, clay, iron ore, rutile, limestone, magnesite, mica, and many other minerals, as well as some man-made materials, such as potassium titanate and titanium dioxide.

SHIELDED METAL ARC WELDING (SMAW)

- A **flux** is a substance used to prevent the formation of oxides and other unwanted contaminants, or to dissolve them and facilitate removal.
- During welding, the flux melts and becomes a liquid slag, covering the operation and protecting the molten weld metal.
- The slag hardens upon cooling and must be removed later by chipping or brushing.
- Flux is usually formulated to serve several additional functions:
  - (1) provide a protective atmosphere for welding
  - (2) stabilize the arc
  - (3) reduce spattering

Introduction to Gas Welding

- *Oxyfuel–gas welding* (OFW) is a general term used to describe any welding process that uses a **fuel gas** combined with *oxygen* to produce a flame, the source of the heat required to melt the metals at the joint.
- The most common gas-welding process uses *acetylene*, known as *oxyacetylene–gas welding* (OAW), typically used for structural metal fabrication and repair work.
- Developed in the early 1900s, OAW utilizes the heat generated by the combustion of acetylene gas (C_2H_2) in a mixture with oxygen. The primary combustion process, which occurs in the inner core of the flame, involves the following reaction:

$$C_2H_2 + O_2 \rightarrow 2CO + H_2 + \text{Heat}.$$

$$2CO + H_2 + 1.5O_2 \rightarrow 2CO_2 + H_2O + \text{Heat}.$$

Oxyfuel–GasWelding

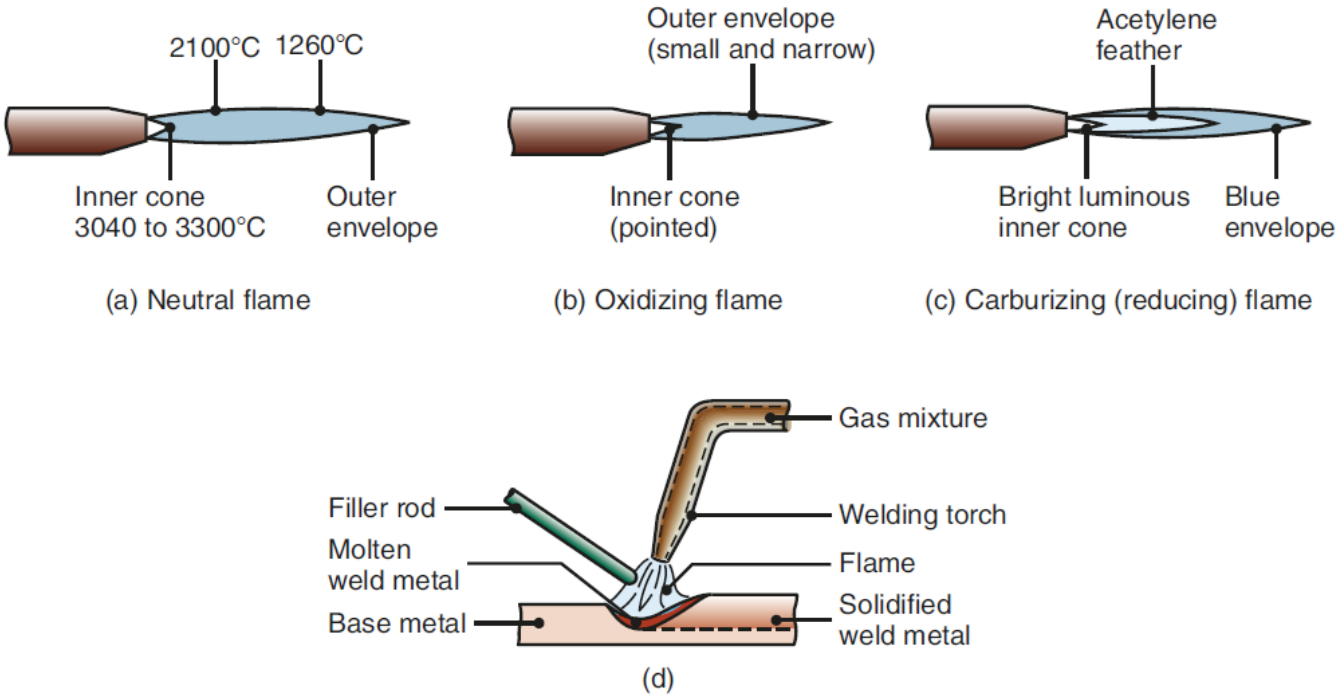

Three basic types of oxyacetylene flames used in oxyfuel–gas welding and cutting operations: (a) neutral flame; (b) oxidizing flame; (c) carburizing, or reducing, flame. The gas mixture in (a) is basically equal volumes of oxygen and acetylene. (d) The principle of the oxyfuel–gas welding process.

Oxyfuel – Gas Welding

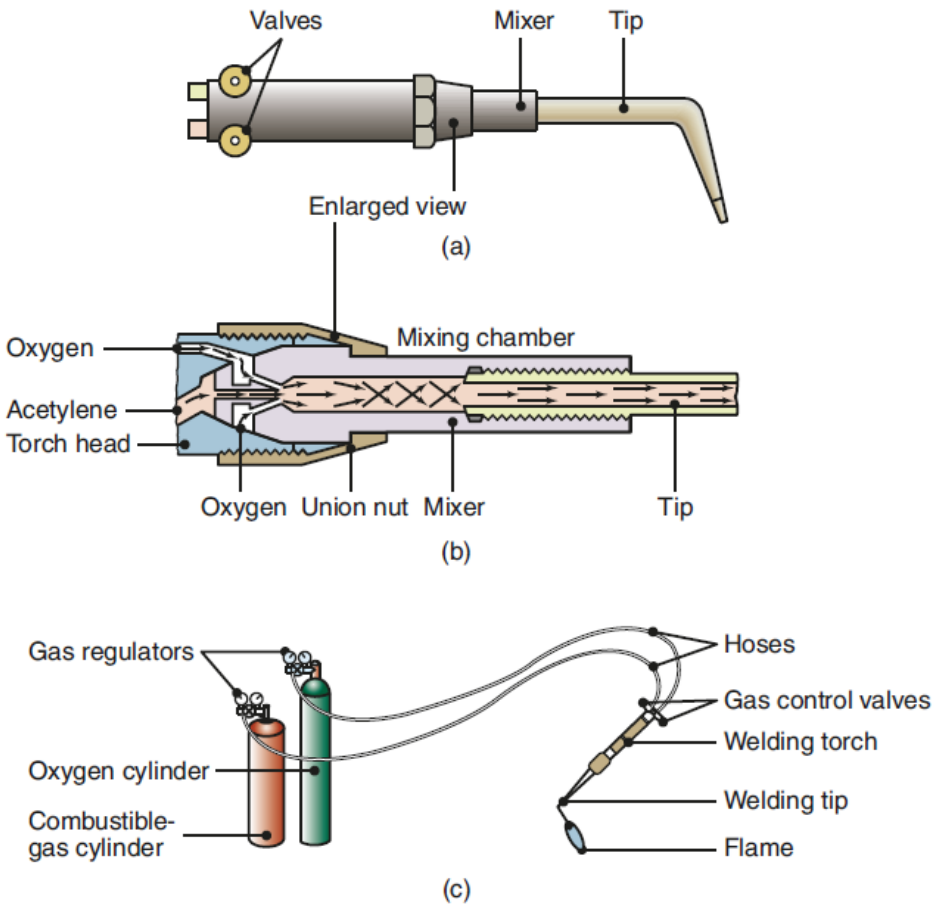

(a) General view (b) cross section of, a torch used in oxyacetylene welding. The acetylene valve is opened first. The gas is lit with a spark lighter or a pilot light. Then the oxygen valve is opened and the flame is adjusted. (c) Basic equipment used in oxyfuel–gas welding. To ensure correct connections, all threads on acetylene fittings are left handed, whereas those for oxygen are right handed. Oxygen regulators usually are painted green and acetylene regulators red.

SOLDERING

- In *soldering*, the filler metal (called **solder**) melts at a relatively low temperature.
- As in brazing, the solder fills the joint by capillary action between closely fitting or closely placed components. Heat sources for soldering are typically soldering irons, torches, or ovens.
- The word “solder” is derived from the Latin *solidare*, meaning to make solid. Soldering with copper–gold and tin–lead alloys was first practiced as far back as 4000 to 3000 B.C.
- Two important characteristics of solders are low surface tension and high wetting capability. Solders melt at the *eutectic point* of the solder alloy.
- Solders traditionally have been tin–lead alloys, in various proportions. A solder of 61.9% Sn–38.1% Pb composition, for example, melts at 188°C, whereas tin melts at 232°C and lead at 327°C

SOLDERING

- In For special applications and higher joint strength, especially at elevated temperatures, other common solder compositions are tin–zinc, lead–silver, cadmium–silver, and zinc–aluminum alloys.
- Because of *toxicity* of lead, and its adverse effects on the environment, **lead-free solders** have been developed. Fluxes for soldering have the same purposes as they do in welding and brazing, and also serve to assist wetting of surfaces by solder. Fluxes for soldering are generally of two types:
- **Inorganic acids or salts**, such as zinc–ammonium-chloride solutions, which clean the surface rapidly. To avoid corrosion, the flux residues should be removed after soldering, by washing the joint thoroughly with water.
- **Noncorrosive resin-based fluxes**, used typically in electrical applications.

Soldering Techniques

- The more common soldering techniques are the following:

1. **Torch soldering** (TS)
2. **Furnace soldering** (FS)
3. **Iron soldering** (INS)
4. **Induction soldering** (IS)
5. **Resistance soldering** (RS)
6. **Dip soldering** (DS)
7. **Infrared soldering** (IRS)
8. **Ultrasonic soldering**.
9. **Reflow (paste) soldering** (RS)
10. **Wave soldering** (WS)

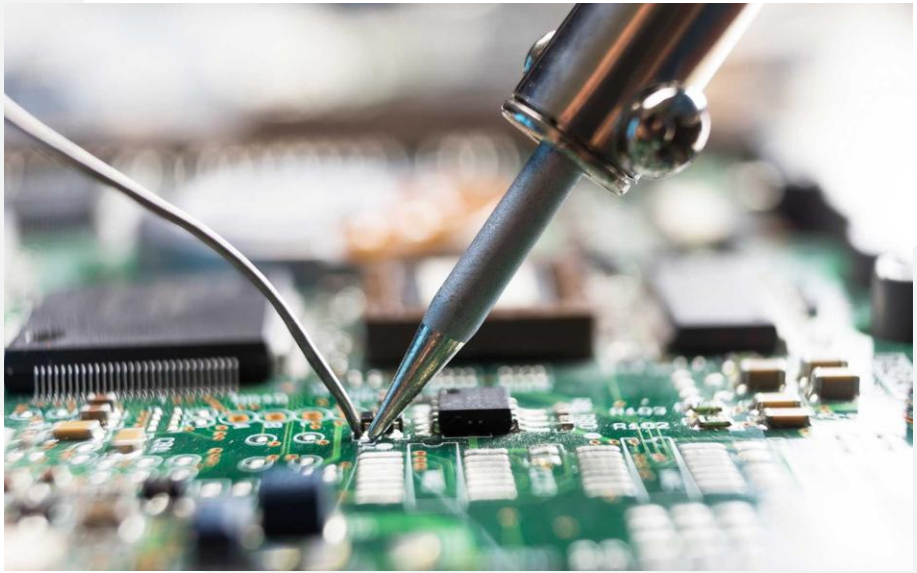

Welding vs. Soldering

- Welding: high temperature, fusion, strong joints.
- Soldering: low temperature (<450°C), weak joints, mainly electronics.

Aspect	Welding	Soldering
Temperature	High (>1000°C)	Low (<450°C)
Strength	High	Low
Bond type	Metallurgical fusion	Mechanical/electrical
Applications	Structures, pipelines	Electronics, PCBs

Materials for Welding & Soldering

- Welding: electrodes, filler rods, fluxes.
- Soldering: Sn-Cu, Sn-Ag, flux.
- In welding, the choice of materials plays a critical role in determining the quality and performance of the joint. Common welding materials include steels, stainless steels, aluminum alloys, nickel-based alloys, and titanium, each selected based on strength, corrosion resistance, and service environment.
- Filler metals and fluxes are often used to stabilize the arc, protect the weld pool from oxidation, and improve metallurgical compatibility.
- For example, low-carbon steels are widely welded due to their ductility, while aluminum alloys require special considerations because of their high thermal conductivity and oxide layer.

Materials for Welding & Soldering

- In soldering, the materials differ significantly: filler metals (solders) typically consist of alloys of tin, lead (now less common due to environmental concerns), silver, bismuth, or indium.
- These materials are chosen because of their low melting points (below 450 °C) and good wettability, allowing bonding without melting the base materials.
- The compatibility between the base material and filler material is essential to avoid issues such as brittleness, cracking, or corrosion.
- In modern applications, lead-free solders (Sn-Ag, Sn-Cu, Sn-Ag-Cu) have gained importance in electronics manufacturing due to health and environmental regulations.

Materials for Welding & Soldering

- Flux materials such as borax, rosin, ammonium chloride or fluorides are widely used in soldering to remove oxides from surfaces, promote wetting, and ensure defect-free joints.
- Thus, the selection of base materials, filler metals, and fluxes ensures a balance of mechanical properties, thermal characteristics, and joint reliability across welding and soldering processes.

Materials for Welding & Soldering

- **Electrode Materials in Welding**
- Electrodes are classified as **consumable** or **non-consumable**:
- **Consumable Electrodes** → melt and become part of the weld:
  - **Mild Steel Electrodes** (E6010, E6013, etc.): Most common, coated with rutile, cellulose, or basic flux.
  - **Stainless Steel Electrodes**: Contain chromium and nickel to provide corrosion resistance.
  - **Cast Iron Electrodes**: Nickel-based or iron electrodes used for repairing cast iron parts.
  - **Aluminum Electrodes**: For welding lightweight aluminum alloys, with special flux to remove oxide film.

Materials for Welding & Soldering

- **Non-Consumable Electrodes** → do not melt, only provide arc:
  - **Tungsten Electrodes (TIG welding)**: Pure tungsten, thoriated tungsten (ThO_2), ceriated or lanthanated tungsten for stable arc and high melting point (~3410 °C).
  - Used in combination with separate filler rods when additional material is needed.

Materials for Welding & Soldering

- **Filler Materials in Soldering**
- **Traditional Solders**: Tin-Lead alloys (Sn-Pb, e.g., 60/40 solder), once common in electronics.
- **Lead-Free Solders** (modern):
  - **Sn-Ag (Tin-Silver)**
  - **Sn-Cu (Tin-Copper)**
  - **Sn-Ag-Cu (SAC alloys)** → most widely used today due to RoHS compliance.
- **Special Solders**:
  - **Tin-Bismuth (Sn-Bi)**: Low melting point, used for temperature-sensitive applications.
  - **Tin-Indium (Sn-In)**: Good for specialty electronics and cryogenic applications.

Materials for Welding & Soldering

Process	Electrode/Filler Types	Examples / Applications
SMAW	Mild steel, stainless steel, cast iron electrodes	General fabrication, pipelines
TIG (GTAW)	Tungsten electrode + filler rods (Al, Mg, Ti, SS)	Aerospace, precision welding
MIG (GMAW)	Solid wires, flux-cored wires	Automotive, structural
Soldering	Sn-Pb, Sn-Ag, Sn-Cu, Sn-Ag-Cu alloys	Electronics, PCB assembly

Safety Devices

- **Safety Devices in Welding**
- **Welding Helmet / Face Shield**
  - Equipped with **filter lenses** (shade 9–14) to protect eyes from UV/IR radiation and arc flashes.
  - Auto-darkening helmets adjust lens shade automatically.
- **Safety Goggles**
  - Used during grinding, chipping, or gas welding/cutting to protect against sparks and debris.
- **Gloves & Protective Clothing**
  - Heat-resistant leather gloves and flame-resistant aprons/jackets.
  - Prevent burns from molten metal and radiant heat.
- **Respirators / Fume Extractors**
  - Welding generates fumes of metal oxides (Zn, Cr, Ni, etc.) → respirators or local exhaust systems are used to prevent inhalation.

Safety Devices

- **Fire Extinguishers & Fire Blankets**
  - Kept near welding stations to quickly extinguish sparks or accidental fires.
- **Gas Welding Safety Devices**
  - **Flashback Arrestor**: Prevents flame from traveling back into gas cylinders.
  - **Non-return Valve (Check Valve)**: Stops reverse gas flow.
  - **Pressure Regulators**: Maintain safe working pressure in cylinders.

Safety Devices in Soldering

- **Fume Extractor / Ventilation System**
  - Removes flux fumes (rosin, acids) which can irritate lungs and eyes.
  - Essential for PCB soldering stations.
- **Heat-resistant Stand (Soldering Iron Holder)**
  - Prevents accidental burns and keeps hot soldering irons safely in place.
- **Personal Protective Equipment (PPE)**
  - Safety Glasses: Protect eyes from solder/flux splashes.
  - Heat-resistant Gloves: Prevent burns when handling components.
- **Temperature-Controlled Soldering Stations**
  - Prevent overheating of soldering tips and reduce risk of fire/electrical accidents.
- **Fume Absorbing Mats / Filters**
  - Capture harmful smoke directly at the soldering point.
- **Lead Safety Devices (for Lead-based Solders)**
  - Special containers for lead waste and hand-washing facilities to avoid ingestion of toxic lead particles.

Questions

- Classify joining processes into permanent and temporary types and illustrate with suitable examples.
- Differentiate between welding, brazing, and soldering based on temperature range, filler material, and joint strength.
- Evaluate the advantages and limitations of permanent joints compared to temporary joints in mechanical assemblies.
- Explain the suitability of different joining methods for aerospace, construction, and electronics applications.
- Compare welding and soldering in terms of heat input, mechanical properties of joints, and industrial usage.

Questions

- Illustrate microstructural changes occurring in the heat-affected zone (HAZ) during welding and analyze their effect on mechanical properties.
- Assess the role of filler materials in welding and justify their necessity compared to soldering.
- Evaluate the sustainability of lead-free solders in electronics manufacturing relative to traditional Sn–Pb solders.
- Explain the principle of arc welding and analyze how arc stability influences weld quality.
- Compare SMAW, MIG, and TIG welding in terms of electrode type, shielding method, and application domain.

Questions

- Illustrate the role of flame types in oxy-acetylene welding and evaluate their effect on weld characteristics.
- Critically analyze the limitations of gas welding compared to arc welding for modern structural fabrication.
- Examine the effect of current and voltage parameters in arc welding and predict possible defects arising from incorrect settings.
- Classify welding electrodes into consumable and non-consumable types and explain their industrial applications.
- Evaluate the selection criteria for filler materials in welding of dissimilar metals.

Questions

- Compare Sn–Ag–Cu solders with Sn–Pb solders in terms of melting point, joint reliability, and environmental compliance.
- Justify the importance of fluxes in both welding and soldering with respect to oxide removal and joint quality.
- Differentiate between the protective functions of welding helmets, safety goggles, and auto-darkening shields.
- Explain the role of flashback arrestors, pressure regulators, and check valves in safe gas welding operations.
- Evaluate the necessity of fume extractors in soldering and recommend best practices for minimizing operator health risks.

Emphasis on modern and emerging technologies

- **CNC Machining (Computer Numerical Control):** CNC machines use **pre-programmed instructions (G-codes & M-codes)** to automate machining operations such as turning, milling, and drilling.
- **Advantages:**
  - High dimensional accuracy and repeatability.
  - Ability to machine complex geometries.
  - Flexibility in small-batch and mass production.
- **Applications:** aerospace turbine blades, biomedical implants, precision automotive parts.
- **Emphasis:** CNC machining is a cornerstone of modern manufacturing due to its **integration with CAD/CAM systems** and capability for **automation and unattended operations**.

Automation in Manufacturing

- **Definition:** Use of mechanical, electronic, and computer-based systems to control manufacturing.
- **Types of Automation**:
  - **Fixed Automation (Mass production)** → dedicated equipment for mass production (e.g., transfer lines, automotive assembly).
  - **Programmable Automation (Batch Production)** → machines can be reprogrammed for different products (e.g., CNC, robots).
  - **Flexible Automation (Customized products)** → integrates CNCs, robots, and sensors for quick changeovers and product variety.
- **Features:** Improved productivity, reduced human error, consistency in quality.

Industrial Internet of Things (IIoT)

- **Definition & Concept:** IIoT is the **integration of sensors, controllers, and machines** into a connected network using the internet or industrial protocols.
- It allows **machines, humans, and digital systems** to exchange data continuously.
- Enables predictive maintenance, energy efficiency, and production optimization.
- In manufacturing, this forms the basis of the **"Smart Factory"**, where decisions can be made in real-time.

Industrial Internet of Things (IIoT)

- **Core Components of IIoT**
- **Smart Sensors** → temperature, vibration, pressure, torque, energy consumption sensors.
- **Connectivity** → Wi-Fi, 5G, Ethernet, Bluetooth, OPC-UA, MQTT for machine-to-machine communication.
- **Edge Devices** → collect and process sensor data locally before sending to the cloud.
- **Cloud Platforms** → store and analyze big data from the factory floor.
- **Analytics & AI** → provide insights for predictive maintenance, optimization, and quality control.

Industrial Internet of Things (IIoT)

- **Key Features & Benefits**
- **Real-Time Monitoring**
  - Detect abnormal vibrations in motors or rising tool temperatures during machining.
  - Alerts operators before breakdowns occur.
- **Predictive Maintenance**
  - Machine learning algorithms predict when a tool, bearing, or motor will fail.
  - Minimizes unplanned downtime and reduces maintenance costs.
- **Energy Management**
  - Sensors monitor energy use of CNC machines, robots, HVAC, and lighting.
  - Enables scheduling during off-peak hours for efficiency.

Industrial Internet of Things (IIoT)

- **Production Optimization**
  - Dynamic scheduling and routing of jobs based on machine availability and health.
  - Reduces cycle time and increases throughput.
- **Quality Assurance**
  - Continuous inspection data (vision systems, dimensional sensors) fed into IIoT systems.
  - Allows **100% in-line inspection** instead of sampling.

Industrial Internet of Things (IIoT)

- **Applications in Industries**
- **Automotive:** Real-time tracking of assembly line equipment and robotic welders.
- **Aerospace:** Predictive monitoring of CNC machining centers for titanium and composite parts.
- **Electronics:** Yield optimization in PCB assembly using IIoT-enabled soldering robots.
- **Biomedical:** Remote monitoring of sterilization equipment and additive manufacturing machines.
- **Sustainable Manufacturing:** Closed-loop monitoring of energy, waste, and emissions.

Smart Manufacturing

- Smart manufacturing combines **automation, robotics, sensors, AI, and IIoT** to create an interconnected and adaptive production environment.
- Key features: **Self-monitoring machines** → detect wear, temperature rise, tool life.
- **Digital Twins** → virtual replicas of physical systems for simulation and optimization.
- **Cyber-Physical Systems (CPS)** → integration of computing and physical processes.
- **Benefits:** higher productivity, customization, energy efficiency, and sustainability.

Applications – Electronics Industry

- **Miniaturization & Precision:**
  - CNC micromachining and laser processing are used to fabricate housings and connectors with micro-level tolerances.
  - Photolithography and microfabrication techniques produce integrated circuits (ICs).
- **Automated PCB Assembly:**
  - Pick-and-place robots and soldering robots handle **surface-mount technology (SMT)** with high speed and accuracy.
  - IIoT sensors track soldering quality and temperature profiles in real-time.
- **Lead-Free Soldering (Sustainability):**
  - Transition to Sn-Ag-Cu alloys in compliance with RoHS standards.
- **Smart Manufacturing Role:**
  - Real-time data collection ensures **zero-defect manufacturing** for high-reliability electronics (used in aerospace and medical devices).

Applications – Aerospace Industry

- **Advanced Materials Processing:**
  - CNC machining of **titanium alloys and nickel-based superalloys** for engine components.
- **Additive Manufacturing (3D Printing):**
  - Complex, lightweight lattice structures for satellite parts, reducing weight and fuel consumption.
- **Automation & Robotics:**
  - Robotic riveting, automated fiber placement (AFP), and welding of fuselage.
- **IIoT in Aerospace:**
  - Real-time health monitoring of jet engines and critical parts using embedded sensors.
- **Smart Manufacturing:**
  - Digital twins simulate aircraft assembly lines, optimizing cycle times and resource usage.

Applications – Biomedical Industry

- **Customized Implants & Prosthetics:** Additive manufacturing enables patient-specific implants (e.g., hip joints, dental implants).Biocompatible materials like titanium, cobalt-chrome, and polymers are used.
- **Surgical Instruments:** CNC machining produces precision scalpels, forceps, and robotic surgery tools.
- **Micro-Manufacturing:** Micromachining and laser processing used in stents and pacemakers.
- **IIoT in Healthcare Manufacturing:** Monitors sterilization processes and ensures compliance with medical standards.
- **Smart Factories in Pharma & Biomed:** Adaptive production for personalized medicine (small-batch, flexible systems).

Applications – Sustainable Manufacturing

- **Energy Efficiency:** CNC machines integrated with IIoT track and minimize energy consumption. Scheduling heavy energy processes during off-peak hours.
- **Material Efficiency & Recycling:** Near-net-shape manufacturing (forging, casting, additive manufacturing) reduces waste. Recycling scrap metals and polymers into new feedstock.
- **Green Manufacturing:** Use of water-based lubricants and minimum quantity lubrication (MQL) in machining.
- **Lifecycle Monitoring:** IIoT enables **end-to-end tracking** of products for repair, reuse, and recycling.

Questions

- Explain the advantages of CNC machining over conventional machining with respect to precision, repeatability, and productivity.
- Analyze the role of G-codes and M-codes in CNC programming and evaluate their impact on machining accuracy.
- Compare the flexibility of CNC machining with additive manufacturing for producing complex geometries.
- Critically assess the limitations of CNC machining in terms of cost, operator training, and part complexity.
- Illustrate industrial applications where CNC machining has transformed traditional manufacturing practices.

Questions

- Classify automation into fixed, programmable, and flexible systems and explain their industrial applications.
- Evaluate the role of robotics in achieving productivity and consistency in smart manufacturing environments.
- Compare fixed automation in automotive assembly lines with flexible automation in biomedical manufacturing.
- Analyze the features of smart manufacturing that distinguish it from traditional automated production systems.
- Justify the adoption of smart manufacturing systems in the context of Industry 4.0 requirements.

Questions

- Explain the architecture of an IIoT-enabled factory including sensors, connectivity, edge devices, and cloud platforms.
- Analyze the significance of predictive maintenance enabled by IIoT and evaluate its economic benefits.
- Compare periodic inspection with real-time IIoT monitoring in terms of accuracy, cost, and efficiency.
- Critically discuss the challenges of cybersecurity and data management in IIoT-enabled smart factories.
- Illustrate the role of digital twins in IIoT and evaluate their impact on design optimization and fault detection.

Questions

- Differentiate the role of automation and soldering robotics in electronics manufacturing from traditional manual assembly methods.
- Evaluate the benefits of additive manufacturing in aerospace applications with respect to weight reduction and fuel efficiency.
- Justify the importance of biocompatibility and customization in biomedical manufacturing over traditional mass production.
- Analyze the contribution of near-net-shape processes and material recycling to sustainable manufacturing.
- Critically assess the statement: “Smart factories are data rich but insight poor” with reference to electronics and aerospace industries.